SC113M

CHASSIS SERIES

SC113MFAC2-605CB
SC113MTQ-563CB
SC113MTQ-330CB

SC113MFAC2-R606CB
SC113MTQ-600CB
SC113MTQ-R400CB

USER'S MANUAL

1.1a

The information in this User's Manual has been carefully reviewed and is believed to be accurate. The vendor assumes no responsibility for any inaccuracies that may be contained in this document, makes no commitment to update or to keep current the information in this manual, or to notify any person or organization of the updates. **Please Note: For the most up-to-date version of this manual, please see our web site at www.supermicro.com.**

Super Micro Computer, Inc. ("Supermicro") reserves the right to make changes to the product described in this manual at any time and without notice. This product, including software and documentation, is the property of Supermicro and/or its licensors, and is supplied only under a license. Any use or reproduction of this product is not allowed, except as expressly permitted by the terms of said license.

IN NO EVENT WILL SUPERMICRO BE LIABLE FOR DIRECT, INDIRECT, SPECIAL, INCIDENTAL, SPECULATIVE OR CONSEQUENTIAL DAMAGES ARISING FROM THE USE OR INABILITY TO USE THIS PRODUCT OR DOCUMENTATION, EVEN IF ADVISED OF THE POSSIBILITY OF SUCH DAMAGES. IN PARTICULAR, SUPERMICRO SHALL NOT HAVE LIABILITY FOR ANY HARDWARE, SOFTWARE, OR DATA STORED OR USED WITH THE PRODUCT, INCLUDING THE COSTS OF REPAIRING, REPLACING, INTEGRATING, INSTALLING OR RECOVERING SUCH HARDWARE, SOFTWARE, OR DATA.

Any disputes arising between manufacturer and customer shall be governed by the laws of Santa Clara County in the State of California, USA. The State of California, County of Santa Clara shall be the exclusive venue for the resolution of any such disputes. Super Micro's total liability for all claims will not exceed the price paid for the hardware product.

California Best Management Practices Regulations for Perchlorate Materials: This Perchlorate warning applies only to products containing CR (Manganese Dioxide) Lithium coin cells. "Perchlorate Material-special handling may apply. See www.dtsc.ca.gov/hazardouswaste/perchlorate"

WARNING: Handling of lead solder materials used in this product may expose you to lead, a chemical known to the State of California to cause birth defects and other reproductive harm.

Manual Revision 1.1a
Release Date: March 24, 2023

Unless you request and receive written permission from Super Micro Computer, Inc., you may not copy any part of this document.

Information in this document is subject to change without notice. Other products and companies referred to herein are trademarks or registered trademarks of their respective companies or mark holders.

Copyright © 2023 by Super Micro Computer, Inc.
All rights reserved.
Printed in the United States of America

Preface

This manual is written for professional system integrators and PC technicians. It provides information for the installation and use of the SC113M chassis. Installation and maintenance should be performed by experienced technicians only.

Supermicro's SC113M 1U chassis packages outstanding high-end performance into an astonishingly short 20" deep chassis, featuring advanced airflow/thermal design for space-limited applications. With its short depth, it efficiently packages eight hot-swappable 2.5" SAS/SATA hard drive bays into a compact 1U form factor. This chassis features a 330W, 400W, 560W or 600W power supply.

This document lists compatible parts and configurations available when this document was published. Always refer to our website for updates on supported parts and configurations at www.supermicro.com

Manual Organization

Chapter 1 Introduction

The introduction provides a checklist of the main components included with this chassis and describes the main features of the SC113M chassis. This chapter also includes contact information.

Chapter 2 Standardized Warning Statements for AC Systems

This chapter lists warnings, precautions, and system safety. You should thoroughly familiarize yourself with this chapter for a general overview of safety precautions that should be followed before installing and servicing this chassis.

Chapter 3 Chassis Components

Refer here for details on this chassis model, including the fans, bays, airflow shields, and other components.

Chapter 4 System Interface

This chapter provides details on the system interface, which includes the functions and information provided by the control panel on the chassis, as well as other LEDs located throughout the system.

Chapter 5 Chassis Setup and Maintenance

Refer to this chapter for detailed information on this chassis. Follow the procedures given in this chapter when installing, removing, or reconfiguring your chassis.

Chapter 6 Rack Installation

Refer to this chapter for detailed information on chassis rack installation. You should follow the procedures given in this chapter when installing, removing or reconfiguring your chassis into a rack environment.

Appendix A Cables

This section references cables, which are compatible with your SC113M system. Refer to our website for additional information on cabling at www.supermicro.com.

Appendix B Power Supply

This chapter lists supported power supply information for your SC113M system. Refer to our website for additional details at www.supermicro.com.

Appendix C BPN-SAS-113TQ Backplane Specifications

This chapter provides information on the BPN-SAS-113TQ backplane. For additional information visit the Supermicro website at www.supermicro.com

Appendix D BPN-SAS3-113A-N2 Backplane Specifications

Refer to this chapter for information on the BPN-SAS3-113A-N2 backplane. For additional information visit the Supermicro website at www.supermicro.com

Table of Contents

Chapter 1 Introduction

1-1 Overview 1-1
1-2 Shipping List 1-1
1-3 Contacting Supermicro 1-2
1-4 Returning Merchandise for Service 1-3

Chapter 2 Standardized Warning Statements for AC Systems

2-1 About Standardized Warning Statements 2-1
Warning Definition 2-1
Installation Instructions 2-4
Circuit Breaker 2-5
Power Disconnection Warning 2-6
Equipment Installation 2-8
Restricted Area 2-9
Battery Handling 2-10
Redundant Power Supplies 2-12
Backplane Voltage 2-13
Comply with Local and National Electrical Codes 2-14
Product Disposal 2-15
Hot Swap Fan Warning 2-16
Power Cable and AC Adapter 2-18

Chapter 3 System Interface

3-1 Overview 3-1
3-2 Control Panel Button and LEDs 3-2
3-3 Drive Carrier LEDs 3-4

Chapter 4 Chassis Setup and Maintenance

4-1 Overview 4-1
4-2 Removing Power From the Chassis 4-1
4-3 Removing the Chassis Cover 4-2
4-4 Installing Hard Drives 4-3
4-5 Installing the Motherboard 4-5
Permanent and Optional Standoffs 4-5
Installing the Motherboard 4-6
Expansion Card Setup 4-7
4-6 Removing the Backplane 4-9
4-7 Backplane Installation 4-10

4-8 Installing the Air Shroud 4-11
4-9 Checking the Airflow 4-12
Completing the Installation 4-13
4-10 System Fans 4-14
4-11 Power Supply 4-16
Replacing a Fixed Power Supply 4-16
Replacing a Redundant Power Supply 4-17

Chapter 5 Rack Installation

5-1 Overview 5-1
5-2 Unpacking the System 5-1
5-3 Preparing for Setup 5-1
Choosing a Setup Location 5-1
Rack Precautions 5-2
General Server Precautions 5-2
Rack Mounting Considerations .....
Ambient Operating Temperature .....
Reduced Airflow .....
Mechanical Loading .....
Circuit Overloading .....
Reliable Ground .....
Rack Mounting Considerations 5-3
Ambient Operating Temperature 5-3
Reduced Airflow 5-3
Mechanical Loading 5-3
Circuit Overloading 5-3
Reliable Ground 5-3
Identifying the Sections of the Rack Rails 5-4
Inner Rails 5-4
Locking Tabs 5-4
Outer Rails 5-5

Appendix A SC113M Chassis Cables

Appendix B SC113M Power Supply Specifications

Appendix C BPN-SAS-113TQ Backplane Specifications

Appendix D BPN-SAS3-113A-N2 Backplane Specifications

Chapter 1

Introduction

1-1 Overview

Supermicro's SC113M 1U chassis featues 8 hot-swappable 2.5" SAS/SATA hard drive bays. Only SAS or enterprise HDDs are recommended. The SC113M chassis. includes a 330, 400, 560 or 600 Watt high-efficiency power supply and one slim DVD-ROM drive.

1-2 Shipping List

SC113M			
Model	**HDD**	**PCI Slots**	**Power Supply**
SC113MFAC2-R606CB	8x 2.5" hot-swap SAS/SATA	1x FH	600W (Redundant)
SC113MFAC2-605CB	8x 2.5" hot-swap SAS/SATA	1x FH	600W
SC113MTQ-600CB	8x 2.5" hot-swap SAS/SATA	1x FH	600W
SC113MTQ-563CB	8x 2.5" hot-swap SAS/SATA	1x FH	560W
SC113MTQ-R400CB	8x 2.5" hot-swap SAS/SATA	1x FH	400W (Redundant)
SC113MTQ-330CB	8x 2.5" hot-swap SAS/SATA	1x FH	330W

1-3 Contacting Supermicro

Headquarters

Address:	Super Micro Computer, Inc. 980 Rock Ave. San Jose, CA 95131 U.S.A.
Tel:	+1 (408) 503-8000
Fax:	+1 (408) 503-8008
Email:	marketing@supermicro.com (General Information) support@supermicro.com (Technical Support)
Website:	www.supermicro.com

Europe

Address:	Super Micro Computer B.V. Het Sterrenbeeld 28, 5215 ML 's-Hertogenbosch, The Netherlands
Tel:	+31 (0) 73-6400390
Fax:	+31 (0) 73-6416525
Email:	sales@supermicro.nl (General Information) support@supermicro.nl (Technical Support) rma@supermicro.nl (Customer Support)
Website:	www.supermicro.nl

Asia-Pacific

Address:	Super Micro Computer, Inc. 3F, No. 150, Jian 1st Rd. Zhonghe Dist., New Taipei City 235 Taiwan (R.O.C)
Tel:	+886-(2) 8226-3990
Fax:	+886-(2) 8226-3992
Email:	support@supermicro.com.tw
Website:	www.supermicro.com.tw

1-4 Returning Merchandise for Service

A receipt or copy of your invoice marked with the date of purchase is required before any warranty service will be rendered. You can obtain service by calling your vendor for a Returned Merchandise Authorization (RMA) number. When returning to the manufacturer, the RMA number should be prominently displayed on the outside of the shipping carton, and mailed prepaid or hand-carried. Shipping and handling charges will be applied for all orders that must be mailed when service is complete.

For faster service, RMA authorizations may be requested online (http://www.supermicro.com/support/rma/).

Whenever possible, repack the chassis in the original Supermicro carton, using the original packaging material. If these are no longer available, be sure to pack the chassis securely, using packaging material to surround the chassis so that it does not shift within the carton and become damaged during shipping.

This warranty only covers normal consumer use and does not cover damages incurred in shipping or from failure due to the alteration, misuse, abuse or improper maintenance of products.

During the warranty period, contact your distributor first for any product problems.

Notes

Chapter 2

Standardized Warning Statements for AC Systems

2-1 About Standardized Warning Statements

The following statements are industry standard warnings, provided to warn the user of situations which have the potential for bodily injury. Should you have questions or experience difficulty, contact Supermicro's Technical Support department for assistance. Only certified technicians should attempt to install or configure components.

Read this appendix in its entirety before installing or configuring components in the Supermicro chassis.

These warnings may also be found on our web site at http://www.supermicro.com/about/policies/safety_information.cfm.

Warning Definition

Warning!

This warning symbol means danger. You are in a situation that could cause bodily injury. Before you work on any equipment, be aware of the hazards involved with electrical circuitry and be familiar with standard practices for preventing accidents.

警告の定義

この警告サインは危険を意味します。

人身事故につながる可能性がありますので、いずれの機器でも動作させる前に、

電気回路に含まれる危険性に注意して、標準的な事故防止策に精通して下さい。

此警告符号代表危险。

您正处于可能受到严重伤害的工作环境中。在您使用设备开始工作之前，必须充分意识到触电的危险，并熟练掌握防止事故发生的标准工作程序。请根据每项警告结尾的声明号码找到此设备的安全性警告说明的翻译文本。

此警告符號代表危險。

您正處於可能身體可能會受損傷的工作環境中。在您使用任何設備之前，請注意觸電的危險，並且要熟悉預防事故發生的標準工作程序。請依照每一注意事項後的號碼找到相關的翻譯說明內容。

Warnung

WICHTIGE SICHERHEITSHINWEISE

Dieses Warnsymbol bedeutet Gefahr. Sie befinden sich in einer Situation, die zu Verletzungen führen kann. Machen Sie sich vor der Arbeit mit Geräten mit den Gefahren elektrischer Schaltungen und den üblichen Verfahren zur Vorbeugung vor Unfällen vertraut. Suchen Sie mit der am Ende jeder Warnung angegebenen Anweisungsnummer nach der jeweiligen Übersetzung in den übersetzten Sicherheitshinweisen, die zusammen mit diesem Gerät ausgeliefert wurden.

BEWAHREN SIE DIESE HINWEISE GUT AUF.

INSTRUCCIONES IMPORTANTES DE SEGURIDAD

Este símbolo de aviso indica peligro. Existe riesgo para su integridad física. Antes de manipular cualquier equipo, considere los riesgos de la corriente eléctrica y familiarícese con los procedimientos estándar de prevención de accidentes. Al final de cada advertencia encontrará el número que le ayudará a encontrar el texto traducido en el apartado de traducciones que acompaña a este dispositivo.

GUARDE ESTAS INSTRUCCIONES.

IMPORTANTES INFORMATIONS DE SÉCURITÉ

Ce symbole d'avertissement indique un danger. Vous vous trouvez dans une situation pouvant entraîner des blessures ou des dommages corporels. Avant de travailler sur un équipement, soyez conscient des dangers liés aux circuits électriques et familiarisez-vous avec les procédures couramment utilisées pour éviter les accidents. Pour prendre connaissance des traductions des avertissements figurant dans les consignes de sécurité traduites qui accompagnent cet appareil, référez-vous au numéro de l'instruction situé à la fin de chaque avertissement.

CONSERVEZ CES INFORMATIONS.

תקנון הצהרות אזהרה

הצהרות הבאות הן אזהרות על פי תקני התעשייה, על מנת להזהיר את המשתמש מפני חבלה פיזית אפשרית. במידה ויש שאלות או היתקלות בבעיה כלשהי, יש ליצור קשר עם מחלקת תמיכה טכנית של סופרמיקרו. טכנאים מוסמכים בלבד רשאים להתקין או להגדיר את הרכיבים.

יש לקרוא את הנספח במלואו לפני התקנת או הגדרת הרכיבים במארזי סופרמיקרו.

تحذير! هذا الرمز يعني خطر انك في حالة يمكن أن تتسبب في اصابة جسدية .
قبل أن تعمل على أي معدات،كن على علم بالمخاطر الناجمة عن الدوائر الكهربائية
وكن على دراية بالممارسات الوقائية لمنع وقوع أي حوادث
استخدم رقم البيان المنصوص في نهاية كل تحذير للعثور ترجمتها

안전을 위한 주의사항

경고!

이 경고 기호는 위험이 있음을 알려 줍니다. 작업자의 신체에 부상을 야기 할 수 있는 상태에 있게 됩니다. 모든 장비에 대한 작업을 수행하기 전에 전기회로와 관련된 위험요소들을 확인하시고 사전에 사고를 방지할 수 있도록 표준 작업절차를 준수해 주시기 바랍니다.

해당 번역문을 찾기 위해 각 경고의 마지막 부분에 제공된 경고문 번호를 참조하십시오

BELANGRIJKE VEILIGHEIDSINSTRUCTIES

Dit waarschuwings symbool betekent gevaar. U verkeert in een situatie die lichamelijk letsel kan veroorzaken. Voordat u aan enige apparatuur gaat werken, dient u zich bewust te zijn van de bij een elektrische installatie betrokken risico's en dient u op de hoogte te zijn van de standaard procedures om ongelukken te voorkomen. Gebruik de nummers aan het eind van elke waarschuwing om deze te herleiden naar de desbetreffende locatie.

BEWAAR DEZE INSTRUCTIES

Installation Instructions

Warning!

Read the installation instructions before connecting the system to the power source.

設置手順書

システムを電源に接続する前に、設置手順書をお読み下さい。

警告
将此系统连接电源前,请先阅读安装说明。

警告
將系統與電源連接前，請先閱讀安裝說明。

Warnung

Vor dem Anschließen des Systems an die Stromquelle die Installationsanweisungen lesen.

¡Advertencia!

Lea las instrucciones de instalación antes de conectar el sistema a la red de alimentación.

Attention

Avant de brancher le système sur la source d'alimentation, consulter les directives d'installation.

יש לקרוא את הוראות התקנה לפני חיבור המערכת למקור מתח.

اقر إرشادات التركيب قبل توصيل النظام إلى مصدر للطاقة

시스템을 전원에 연결하기 전에 설치 안내를 읽어주십시오.

Waarschuwing

Raadpleeg de installatie-instructies voordat u het systeem op de voedingsbron aansluit.

Circuit Breaker

Warning!

This product relies on the building's installation for short-circuit (overcurrent) protection. Ensure that the protective device is rated not greater than: 250 V, 20 A.

サーキット・ブレーカー

この製品は、短絡（過電流）保護装置がある建物での設置を前提としています。

保護装置の定格が250 V、20 Aを超えないことを確認下さい。

警告
此产品的短路(过载电流)保护由建筑物的供电系统提供,确保短路保护设备的额定电流不大于250V,20A。

警告
此產品的短路(過載電流)保護由建築物的供電系統提供,確保短路保護設備的額定電流不大於250V,20A。

Warnung

Dieses Produkt ist darauf angewiesen, dass im Gebäude ein Kurzschluss- bzw. Überstromschutz installiert ist. Stellen Sie sicher, dass der Nennwert der Schutzvorrichtung nicht mehr als: 250 V, 20 A beträgt.

¡Advertencia!

Este equipo utiliza el sistema de protección contra cortocircuitos (o sobrecorrientes) del edificio. Asegúrese de que el dispositivo de protección no sea superior a: 250 V, 20 A.

Attention

Pour ce qui est de la protection contre les courts-circuits (surtension), ce produit dépend de l'installation électrique du local. Vérifiez que le courant nominal du dispositif de protection n'est pas supérieur à :250 V, 20 A.

מוצר זה מסתמך על הגנה המותקנת במבנים למניעת קצר חשמלי. יש לוודא כי המכשיר המגן מפני הקצר החשמלי הוא לא יותר מ-250 V, 20 A

هذا المنتج يعتمد على معدات الحماية من الدوائر القصيرة التي تم تثبيتها في المبنى
تأكد من أن تقييم الجهاز الوقائي ليس أكثر من: 20A, 250V

경고!

이 제품은 전원의 단락(과전류)방지에 대해서 전적으로 건물의 관련 설비에 의존합니다. 보호장치의 정격이 반드시 250V(볼트), 20A(암페어)를 초과하지 않도록 해야 합니다.

Waarschuwing

Dit product is afhankelijk van de kortsluitbeveiliging (overspanning) van uw electrische installatie. Controleer of het beveiligde aparaat niet groter gedimensioneerd is dan 220V, 20A.

Power Disconnection Warning

Warning!

The system must be disconnected from all sources of power and the power cord removed from the power supply module(s) before accessing the chassis interior to install or remove system components.

電源切断の警告

システムコンポーネントの取り付けまたは取り外しのために、シャーシー内部にアクセスするには、
システムの電源はすべてのソースから切断され、電源コードは電源モジュールから取り外す必要があります。

警告

在你打开机箱并安装或移除内部器件前,必须将系统完全断电,并移除电源线。

警告

在您打開機殼安裝或移除內部元件前，必須將系統完全斷電，並移除電源線。

Warnung

Das System muss von allen Quellen der Energie und vom Netzanschlusskabel getrennt sein, das von den Spg.Versorgungsteilmodulen entfernt wird, bevor es auf den Chassisinnenraum zurückgreift, um Systemsbestandteile anzubringen oder zu entfernen.

¡Advertencia!

El sistema debe ser disconnected de todas las fuentes de energía y del cable eléctrico quitado de los módulos de fuente de alimentación antes de tener acceso el interior del chasis para instalar o para quitar componentes de sistema.

Attention

Le système doit être débranché de toutes les sources de puissance ainsi que de son cordon d'alimentation secteur avant d'accéder à l'intérieur du chassis pour installer ou enlever des composants de systéme.

אזהרה !

יש לנתק את המערכת מכל מקורות החשמל ויש להסיר את כבל החשמלי מהספק לפני גישה לחלק הפנימי של המארז לצורך התקנת או הסרת רכיבים.

يجب فصل النظام من جميع مصادر الطاقة وإزالة سلك الكهرباء من وحدة امداد الطاقة قبل
الوصول إلى المناطق الداخلية للهيكل لتثبيت أو إزالة مكونات الجهاز

경고!

시스템에 부품들을 장착하거나 제거하기 위해서는 섀시 내부에 접근하기 전에 반드시 전원 공급장치로부터 연결되어있는 모든 전원과 전기코드를 분리해주어야 합니다.

Waarschuwing

Voordat u toegang neemt tot het binnenwerk van de behuizing voor het installeren of verwijderen van systeem onderdelen, dient u alle spanningsbronnen en alle stroomkabels aangesloten op de voeding(en) van de behuizing te verwijderen

Equipment Installation

Warning!

Only trained and qualified personnel should be allowed to install, replace, or service this equipment.

機器の設置

トレーニングを受け認定された人だけがこの装置の設置、交換、またはサービスを許可されています。

警告

只有经过培训且具有资格的人员才能进行此设备的安装、更换和维修。

警告

只有經過受訓且具資格人員才可安裝、更換與維修此設備。

Warnung

Das Installieren, Ersetzen oder Bedienen dieser Ausrüstung sollte nur geschultem, qualifiziertem Personal gestattet werden.

¡Advertencia!

Solamente el personal calificado debe instalar, reemplazar o utilizar este equipo.

Attention

Il est vivement recommandé de confier l'installation, le remplacement et la maintenance de ces équipements à des personnels qualifiés et expérimentés.

אזהרה !

צוות מוסמך בלבד רשאי להתקין, להחליף את הציוד או לתת שירות עבור הציוד.

يجب أن يسمح فقط للموظفين المؤهلين والمدربين لتركيب واستبدال أو خدمة هذا الجهاز

경고!

훈련을 받고 공인된 기술자만이 이 장비의 설치, 교체 또는 서비스를 수행할 수 있습니다.

Waarschuwing

Deze apparatuur mag alleen worden geïnstalleerd, vervangen of hersteld door geschoold en gekwalificeerd personeel.

Restricted Area

Warning!

This unit is intended for installation in restricted access areas. A restricted access area can be accessed only through the use of a special tool, lock and key, or other means of security. (This warning does not apply to workstations).

アクセス制限区域

このユニットは、アクセス制限区域に設置されることを想定しています。

アクセス制限区域は、特別なツール、鍵と錠前、その他のセキュリティの手段を用いてのみ出入りが可能です。

警告

此部件应安装在限制进出的场所，限制进出的场所指只能通过使用特殊工具、锁和钥匙或其它安全手段进出的场所。

警告

此裝置僅限安裝於進出管制區域，進出管制區域係指僅能以特殊工具、鎖頭及鑰匙或其他安全方式才能進入的區域。

Warnung

Diese Einheit ist zur Installation in Bereichen mit beschränktem Zutritt vorgesehen. Der Zutritt zu derartigen Bereichen ist nur mit einem Spezialwerkzeug, Schloss und Schlüssel oder einer sonstigen Sicherheitsvorkehrung möglich.

¡Advertencia!

Esta unidad ha sido diseñada para instalación en áreas de acceso restringido. Sólo puede obtenerse acceso a una de estas áreas mediante la utilización de una herramienta especial, cerradura con llave u otro medio de seguridad.

Attention

Cet appareil doit être installée dans des zones d'accès réservés. L'accès à une zone d'accès réservé n'est possible qu'en utilisant un outil spécial, un mécanisme de verrouillage et une clé, ou tout autre moyen de sécurité.

אזור עם גישה מוגבלת

אזהרה !
יש להתקין את היחידה באזורים שיש בהם הגבלת גישה. הגישה ניתנת בעזרת כלי אבטחה בלבד (מפתח, מנעול וכד׳).

تم تخصيص هذه الوحدة لتركيبها في مناطق محظورة .
يمكن الوصول إلى منطقة محظورة فقط من خلال استخدام أداة خاصة،
قفل ومفتاح أو أي وسيلة أخرى للالأمان

경고!

이 장치는 접근이 제한된 구역에 설치하도록 되어있습니다. 특수도구, 잠금 장치 및 키, 또는 기타 보안 수단을 통해서만 접근 제한 구역에 들어갈 수 있습니다.

Waarschuwing

Dit apparaat is bedoeld voor installatie in gebieden met een beperkte toegang. Toegang tot dergelijke gebieden kunnen alleen verkregen worden door gebruik te maken van speciaal gereedschap, slot en sleutel of andere veiligheidsmaatregelen.

Battery Handling

Warning!

There is the danger of explosion if the battery is replaced incorrectly. Replace the battery only with the same or equivalent type recommended by the manufacturer. Dispose of used batteries according to the manufacturer's instructions

電池の取り扱い

電池交換が正しく行われなかった場合、破裂の危険性があります。交換する電池はメーカーが推奨する型、または同等のものを使用下さい。使用済電池は製造元の指示に従って処分して下さい。

警告
电池更换不当会有爆炸危险。请只使用同类电池或制造商推荐的功能相当的电池更换原有电池。请按制造商的说明处理废旧电池。

警告
電池更換不當會有爆炸危險。請使用製造商建議之相同或功能相當的電池更換原有電池。請按照製造商的說明指示處理廢棄舊電池。

Warnung

Bei Einsetzen einer falschen Batterie besteht Explosionsgefahr. Ersetzen Sie die Batterie nur durch den gleichen oder vom Hersteller empfohlenen Batterietyp. Entsorgen Sie die benutzten Batterien nach den Anweisungen des Herstellers.

Attention

Danger d'explosion si la pile n'est pas remplacée correctement. Ne la remplacer que par une pile de type semblable ou équivalent, recommandée par le fabricant. Jeter les piles usagées conformément aux instructions du fabricant.

¡Advertencia!

Existe peligro de explosión si la batería se reemplaza de manera incorrecta. Reemplazar la batería exclusivamente con el mismo tipo o el equivalente recomendado por el fabricante. Desechar las baterías gastadas según las instrucciones del fabricante.

אזהרה !

קיימת סכנת פיצוץ של הסוללה במידה והוחלפה בדרך לא תקינה. יש להחליף את הסוללה בסוג התואם מחברת יצרן מומלצת.

סילוק הסוללות המשומשות יש לבצע לפי הוראות היצרן.

هناك خطر من انفجار في حالة استبدال البطارية بطريقة غير صحيحة فعليك استبدال البطارية
فقط بنفس النوع أو ما يعادلها كما أوصت به الشركة المصنعة
تخلص من البطاريات المستعملة وفقا لتعليمات الشركة الصانعة

경고!

배터리가 올바르게 교체되지 않으면 폭발의 위험이 있습니다. 기존 배터리와 동일하거나 제조사에서 권장하는 동등한 종류의 배터리로만 교체해야 합니다. 제조사의 안내에 따라 사용된 배터리를 처리하여 주십시오.

Waarschuwing

Er is ontploffingsgevaar indien de batterij verkeerd vervangen wordt. Vervang de batterij slechts met hetzelfde of een equivalent type die door de fabrikant aanbevolen wordt. Gebruikte batterijen dienen overeenkomstig fabrieksvoorschriften afgevoerd te worden.

Redundant Power Supplies

Warning!

This unit might have more than one power supply connection. All connections must be removed to de-energize the unit.

冗長電源装置

このユニットは複数の電源装置が接続されている場合があります。

ユニットの電源を切るためには、すべての接続を取り外さなければなりません。

警告

此部件连接的电源可能不止一个，必须将所有电源断开才能停止给该部件供电。

警告

此裝置連接的電源可能不只一個，必須切斷所有電源才能停止對該裝置的供電。

Warnung

Dieses Gerät kann mehr als eine Stromzufuhr haben. Um sicherzustellen, dass der Einheit kein trom zugeführt wird, müssen alle Verbindungen entfernt werden.

¡Advertencia!

Puede que esta unidad tenga más de una conexión para fuentes de alimentación. Para cortar por completo el suministro de energía, deben desconectarse todas las conexiones.

Attention

Cette unité peut avoir plus d'une connexion d'alimentation. Pour supprimer toute tension et tout courant électrique de l'unité, toutes les connexions d'alimentation doivent être débranchées.

אם קיים יותר מספק אחד

אזהרה !

ליחדה יש יותר מחיבור אחד של ספק. יש להסיר את כל החיבורים על מנת לרוקן את היחידה.

قد يكون لهذا الجهاز عدة اتصالات بوحدات امداد الطاقة.
يجب إزالة كافة الاتصالات لعزل الوحدة عن الكهرباء

경고!

이 장치에는 한 개 이상의 전원 공급 단자가 연결되어 있을 수 있습니다. 이 장치에 전원을 차단하기 위해서는 모든 연결 단자를 제거해야만 합니다.

Waarschuwing

Deze eenheid kan meer dan één stroomtoevoeraansluiting bevatten. Alle aansluitingen dienen verwijderd te worden om het apparaat stroomloos te maken.

Backplane Voltage

Warning!

Hazardous voltage or energy is present on the backplane when the system is operating. Use caution when servicing.

バックプレーンの電圧

システムの稼働中は危険な電圧または電力が、バックプレーン上にかかっています。

修理する際には注意ください。

警告

当系统正在进行时，背板上有很危险的电压或能量，进行维修时务必小心。

警告

當系統正在進行時，背板上有危險的電壓或能量，進行維修時務必小心。

Warnung

Wenn das System in Betrieb ist, treten auf der Rückwandplatine gefährliche Spannungen oder Energien auf. Vorsicht bei der Wartung.

¡Advertencia!

Cuando el sistema está en funcionamiento, el voltaje del plano trasero es peligroso. Tenga cuidado cuando lo revise.

Attention

Lorsque le système est en fonctionnement, des tensions électriques circulent sur le fond de panier. Prendre des précautions lors de la maintenance.

מתח בפנל האחורי

אזהרה !
קיימת סכנת מתח בפנל האחורי בזמן תפעול המערכת. יש להיזהר במהלך העבודה.

هناك خطر من التيار الكهربائي أوالطاقة الموجودة على اللوحة
عندما يكون النظام يعمل كن حذرا عند خدمة هذا الجهاز

경고!

시스템이 동작 중일 때 후면판 (Backplane)에는 위험한 전압이나 에너지가 발생합니다. 서비스 작업 시 주의하십시오.

Waarschuwing

Een gevaarlijke spanning of energie is aanwezig op de backplane wanneer het systeem in gebruik is. Voorzichtigheid is geboden tijdens het onderhoud.

Comply with Local and National Electrical Codes

Warning!

Installation of the equipment must comply with local and national electrical codes.

地方および国の電気規格に準拠
機器の取り付けはその地方および国の電気規格に準拠する必要があります。

警告

设备安装必须符合本地与本国电气法规。

警告

設備安裝必須符合本地與本國電氣法規。

Warnung

Die Installation der Geräte muss den Sicherheitsstandards entsprechen.

¡Advertencia!

La instalacion del equipo debe cumplir con las normas de electricidad locales y nacionales.

Attention

L'équipement doit être installé conformément aux normes électriques nationales et locales.

תיאום חוקי החשמל הארצי

אזהרה !
התקנת הציוד חייבת להיות תואמת לחוקי החשמל המקומיים והארציים.

تركيب المعدات الكهربائية يجب أن يمتثل للقوانين المحلية والوطنية المتعلقة بالكهرباء

경고!

현 지역 및 국가의 전기 규정에 따라 장비를 설치해야 합니다.

Waarschuwing

Bij installatie van de apparatuur moet worden voldaan aan de lokale en nationale elektriciteitsvoorschriften.

Product Disposal

Warning!

Ultimate disposal of this product should be handled according to all national laws and regulations.

製品の廃棄

この製品を廃棄処分する場合、国の関係する全ての法律・条例に従い処理する必要があります。

警告
本产品的废弃处理应根据所有国家的法律和规章进行。

警告
本產品的廢棄處理應根據所有國家的法律和規章進行。

Warnung

Die Entsorgung dieses Produkts sollte gemäß allen Bestimmungen und Gesetzen des Landes erfolgen.

¡Advertencia!

Al deshacerse por completo de este producto debe seguir todas las leyes y reglamentos nacionales.

Attention

La mise au rebut ou le recyclage de ce produit sont généralement soumis à des lois et/ou directives de respect de l'environnement. Renseignez-vous auprès de l'organisme compétent.

סילוק המוצר

אזהרה !
סילוק סופי של מוצר זה חייב להיות בהתאם להנחיות וחוקי המדינה.

عند التخلص النهائي من هذا المنتج ينبغي التعامل معه وفقا لجميع القوانين واللوائح الوطنية

경고!

이 제품은 해당 국가의 관련 법규 및 규정에 따라 폐기되어야 합니다.

Waarschuwing

De uiteindelijke verwijdering van dit product dient te geschieden in overeenstemming met alle nationale wetten en reglementen.

Hot Swap Fan Warning

Warning!

Hazardous moving parts. Keep away from moving fan blades. The fans might still be turning when you remove the fan assembly from the chassis. Keep fingers, screwdrivers, and other objects away from the openings in the fan assembly's housing.

ファン・ホットスワップの警告

警告!回転部品に注意。運転中は回転部(羽根)に触れないでください。シャーシから冷却ファン装置を取り外した際、ファンがまだ回転している可能性があります。ファンの開口部に、指、ドライバー、およびその他のものを近づけないで下さい。

警告!
警告！危险的可移动性零件。请务必与转动的风扇叶片保持距离。 当您从机架移除风扇装置，风扇可能仍在转动。小心不要将手指、螺丝起子和其他物品太靠近风扇

警告
危險的可移動性零件。請務必與轉動的風扇葉片保持距離。 當您從機架移除風扇裝置，風扇可能仍在轉動。小心不要將手指、螺絲起子和其他物品太靠近風扇。

Warnung

Gefährlich Bewegende Teile. Von den bewegenden Lüfterblätter fern halten. Die Lüfter drehen sich u. U. noch, wenn die Lüfterbaugruppe aus dem Chassis genommen wird. Halten Sie Finger, Schraubendreher und andere Gegenstände von den Öffnungen des Lüftergehäuses entfernt.

¡Advertencia!

Riesgo de piezas móviles. Mantener alejado de las aspas del ventilador. Los ventiladores podran dar vuelta cuando usted quite ell montaje del ventilador del chasis. Mandtenga los dedos, los destornilladores y todos los objetos lejos de las aberturas del ventilador

Attention

Pieces mobiles dangereuses. Se tenir a l'ecart des lames du ventilateur Il est possible que les ventilateurs soient toujours en rotation lorsque vous retirerez le bloc ventilateur du châssis. Prenez garde à ce que doigts, tournevis et autres objets soient éloignés du logement du bloc ventilateur.

אזהרה !

כאשר מסירים את חלקי המאוורר מהמארז, יתכן והמאוררים עדיין עובדים. יש להרחיק למרחק בטוח את האצבעות וכלי עבודה שונים מהפתחים בתוך המאוורר

من الممكن أن المراوح لا تزال تدورعند إزالة كتلة المروحة من الهيكل يجب إبقاء الأصابع ومفكات البراغي

경고!

움직이는 위험한 부품. 회전하는 송풍 날개에 접근하지 마세요. 섀시로부터 팬 조립품을 제거할 때 팬은 여전히 회전하고 있을 수 있습니다. 팬 조립품 외관의 열려있는 부분들로부터 손가락 및 스크류드라이버, 다른 물체들이 가까이 하지 않도록 배치해 주십시오.

Waarschuwing

Gevaarlijk bewegende onderdelen. Houd voldoende afstand tot de bewegende ventilatorbladen. Het is mogelijk dat de ventilator nog draait tijdens het verwijderen van het ventilatorsamenstel uit het chassis. Houd uw vingers, schroevendraaiers en eventuele andere voorwerpen uit de buurt van de openingen in de ventilatorbehuizing.

Power Cable and AC Adapter

Warning!

Warning! When installing the product, use the provided or designated connection or procure cables, power cables and AC adaptors complying with local codes and safety requirements including proper cord size and plug. Using any other cables and adaptors could cause a malfunction or a fire. Electrical Appliance and Material Safety Law prohibits the use of UL or CSA -certified cables (that have UL/CSA shown on the code) for any other electrical devices than products designated by Supermicro only..

電源コードとACアダプター

製品を設置する場合、提供または指定および購入された接続ケーブル、電源コードとACアダプターを 該当する地域の条例や安全基準に適合するコードサイズやプラグと共に使用下さい。他のケーブルやアダプタを使用すると故障や火災の原因になることがあります。電気用品安全法は、ULまたはCSA認定のケーブル(UL/CSEマークがコードに表記)を Supermicroが指定する製品以外に使用することを禁止しています。

警告

安装此产品时,请使用本身提供的或指定的或采购的连接线,电源线和电源适配器，包含遵照当地法规和安全要求的合规的电源线尺寸和插头.使用其它线材或适配器可能会引起故障或火灾。除了Supermicro所指定的产品,电气用品和材料安全法律规定禁止 使用未经UL或CSA认证的线材。(线材上会显示UL/CSA符号)。

警告

安裝此產品時,請使用本身提供的或指定的或採購的連接線,電源線和電源適配器，包含遵照當地法規和安全要求的合規的電源線尺寸和插頭.使用其它線材或適配器可能會引起故障或火災。除了Supermicro所指定的產品,電氣用品和材料安全法律規定禁止 使用未經UL或CSA認證的線材。 (線材上會顯示UL/CSA符號)。

Warnung

Nutzen Sie beim Installieren des Produkts ausschließlich die von uns zur Verfügung gestellten Verbindungskabeln, Stromkabeln und/oder Adapater, die Ihre örtlichen Sicherheitsstandards einhalten. Der Gebrauch von anderen Kabeln und Adapter können Fehlfunktionen oder Feuer verursachen. Die Richtlinien untersagen das Nutzen von UL oder CAS zertifizierten Kabeln (mit UL/CSA gekennzeichnet), an Geräten oder Produkten die nicht mit Supermicro gekennzeichnet sind.

¡Advertencia!

Cuando instale el producto, utilice la conexión provista o designada o procure cables, Cables de alimentación y adaptadores de CA que cumplan con los códigos locales y los requisitos de seguridad, incluyendo el tamaño adecuado del cable y el enchufe. El uso de otros cables y adaptadores podría causar un mal funcionamiento o un incendio. La Ley de Seguridad de Aparatos Eléctricos y de Materiales prohíbe El uso de cables certificados por UL o CSA (que tienen el certificado UL / CSA en el código) para cualquier otros dispositivos eléctricos que los productos designados únicamente por Supermicro.Attention

Attention

Lors de l'installation du produit, utilisez les cables de connection fournis ou désigné ou achetez des cables, cables de puissance et adaptateurs respectant les normes locales et les conditions de securite y compris les tailles de cables et les prises electriques appropres. L'utilisation d'autres cables et adaptateurs peut provoquer un dysfonctionnement ou un incendie. Appareils électroménagers et la Loi sur la Sécurité Matériel interdit l'utilisation de câbles certifies- UL ou CSA (qui ont UL ou CSA indiqué sur le code) pour tous les autres appareils électriques sauf les produits désignés par Supermicro seulement.

AC ימאתמו ם״ילמשח ם״לבכ

!הרהזא

וא ושכרנ רשא AC ם״מאתמו ם״יקפס ,ם״לבכב שמתשהל שי ,רצומה תא ם״יניקתמ רשאכ לש הנוכנ הדימ ללוכ ,תוימוקמה תוחיטבה תושירדל ומאתוה רשאו ,הנקתהה ,ם״מאתוה הנקתהה ,ם״ילמשח רצק וא הלקתל גרוב לולע ,רחא גוסמ ם״אתמ וא לבכ לכב שומיש . עקתהו לבכה ם״לבכב שמתשהל רוסיא ם״ייק ,תוחיטבה יקוחו למשחה ירישכמב שומישה יקוחל ם״אתהב ילמשח רצומ לכ רובע (UL/CSA לש דוק ם״הילע עיפומ רשאכ) CSA-ב וא UL -ב ם״יכמסומה ם״ע ם״אתוה רשא רצומב קר אלא ,רחא ,Supermicro ידבלב.

عند تركيب المنتج، قم باستخدام التوصيلات المتوفرة أو المحددة أو قم بشراء الكابلات المحلية بما في ذلك حجم الموصل والقابس السليم. استخدام أي كابلات وموصلات أخرى قد يتسبب في عطل أو حريق. يحظر قانون السلامة للأجهزة الكهربائية والمعدات استخدام الكابلات المعتمدة من قبل UL أو CSA والتي تحمل علامة (UL/CSA) مع أي معدات أخرى غير المنتجات المعينة والمحددة من قبل Supermicro.

전원 케이블 및 AC 어댑터

경고! 제품을 설치할 때 현지 코드 및 적절한 굵기의 코드와 플러그를 포함한 안전 요구 사항을 준수하여 제공되거나 지정된 연결 혹은 구매 케이블, 전원 케이블 및 AC 어댑터를 사용하십시오.

다른 케이블이나 어댑터를 사용하면 오작동이나 화재가 발생할 수 있습니다. 전기 용품 안전법은 UL 또는 CSA 인증 케이블 (코드에 UL / CSA가 표시된 케이블)을 Supermicro가 지정한 제품 이외의 전기 장치에 사용하는 것을 금지합니다.

Stroomkabel en AC-Adapter

Waarschuwing! Bij het aansluiten van het Product uitsluitend gebruik maken van de geleverde Kabels of een andere geschikte aan te schaffen Aansluitmethode, deze moet altijd voldoen aan de lokale voorschriften en veiligheidsnormen, inclusief de juiste kabeldikte en stekker. Het gebruik van niet geschikte Kabels en/of Adapters kan een storing of brand veroorzaken. Wetgeving voor Elektrische apparatuur en Materiaalveiligheid verbied het gebruik van UL of CSA -gecertificeerde Kabels (met UL/CSA in de code) voor elke andere toepassing dan de door Supermicro hiervoor beoogde Producten.

Chapter 3

System Interface

3-1 Overview

There are several LEDs on the control panel as well as others on the drive carriers to keep you constantly informed of the overall status of the system as well as the activity and health of specific components. Most SC113M models are two buttons on the control panel: a reset button, an on/off switch.and a UID button. This chapter explains the meanings of all LED indicators and the appropriate response you may need to take.

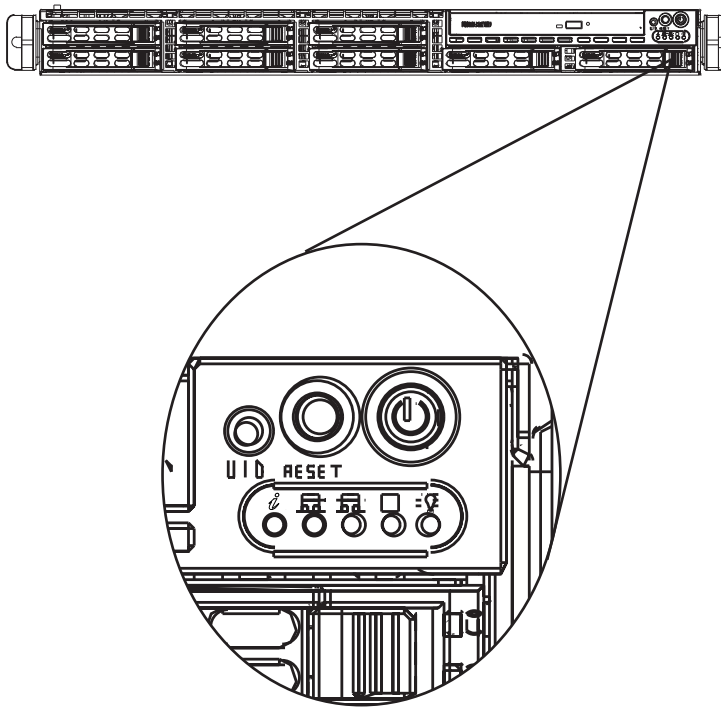

Figure 3-1. Chassis User Interface

3-2 Control Panel Button and LEDs

There are two push-buttons located on the front of the chassis. These are (in order from left to right) a reset button and a power on/off button.

Reset: The reset button is used to reboot the system.

Power: The main power switch is used to apply or remove power from the power supply to the server system. Turning off system power with this button removes the main power but keeps standby power supplied to the system. Therefore, you must unplug system before servicing.

Unit Identification LED: The Unit Identification LED is used to indicate fan failure, power failure, overheat condition, or to identify the unit within a large rack installation. The feature requires a motherboard that supports the Universal Information LED.

When this LED blinks red quickly, it indicates a fan failure and when blinking red slowly a power failure. This LED will be blue when used for UID (Unit Identifier). When on continuously red, it indicates an overheat condition, which may be caused by cables obstructing the airflow in the system or the ambient room temperature being too warm. See the table below for descriptions of the LED states

Information LED	
Status	**Description**
Solid red	An overheat condition has occurred. (This may be caused by cable congestion).
Blinking red (1Hz)	Fan failure, check for an inoperative fan.
Blinking red (0.25Hz)	Power failure, check for a non-operational power supply.
Solid blue	Local UID has been activated. Use this function to locate the server in a rack mount environment.
Blinking blue (300 msec)	Remote UID is on. Use this function to identify the server from a remote location.

NIC2: Indicates network activity on GLAN2 when flashing.

NIC1: Indicates network activity on GLAN1 when flashing.

HDD: Indicates hard drive activity. SAS/SATA drive and/or DVD-ROM drive activity when flashing.

Power: Indicates power is being supplied to the system's power supply units. This LED should normally be illuminated when the system is operating.

3-3 Drive Carrier LEDs

Your chassis uses SAS or SATA, but not both at the same time.

SAS/SATA Drives

Each SAS/SATA drive carrier has two LEDs.

- **Green:** Each Serial ATA drive carrier has a green LED. When illuminated, this green LED (on the front of the SATA drive carrier) indicates drive activity. A connection to the SATA backplane enables this LED to blink on and off when that particular drive is being accessed.

- **Red:** The red LED indicates a SAS/SATA drive failure. If one of the SAS/SATA drives fail, you should be notified by your system management software.

Chapter 4

Chassis Setup and Maintenance

4-1 Overview

This chapter covers the steps required to install components and perform maintenance on the SC113M chassis. The only tool you will need to install components and perform maintenance is a Phillips screwdriver, and under certain circumstances, a hex wrench. Print this page to use as a reference while setting up your chassis.

4-2 Removing Power From the Chassis

Prior to installing components or performing maintenance, the chassis must be powered off and completely disconnected from any power source

Removing Power From the Chassis

1. Power down the system using the on-screen prompts in the operating system.

2. Grasp the head of the power cord and unplug the power cord from the back of the power supply. If your system includes a redundant power supply, remove the power cords from both power supplies.

Review the warnings and precautions listed in the manual before setting up or servicing this chassis. These include information in Chapter 2: Standardized Warning Statements for AC Systems and the warning/precautions listed in the setup instructions.

4-3 Removing the Chassis Cover

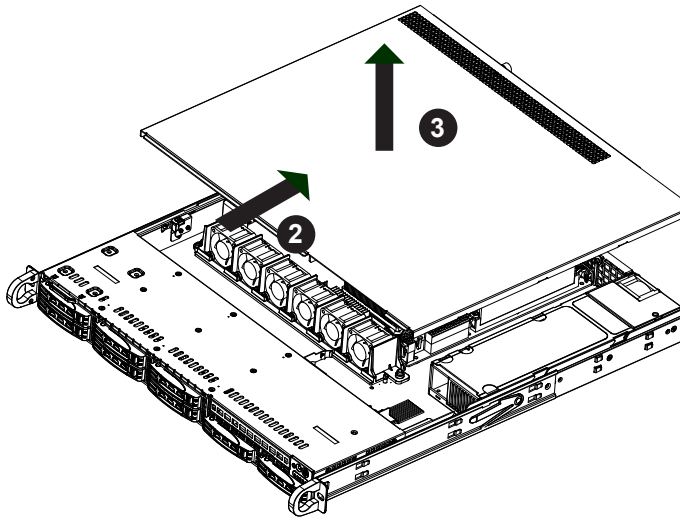

Figure 4-1. Removing the Chassis Cover

Removing the Chassis Cover the Chassis Cover

1. Remove the power cord from the rear of the power supply as described in Section 4-2.

2. Slide the cover toward the rear of the chassis.

3. Lift the cover up and off the chassis.

Warning: Except for short periods of time, do NOT operate the server without the cover in place. The chassis cover must be in place to allow proper airflow and prevent overheating.

4-4 Installing Hard Drives

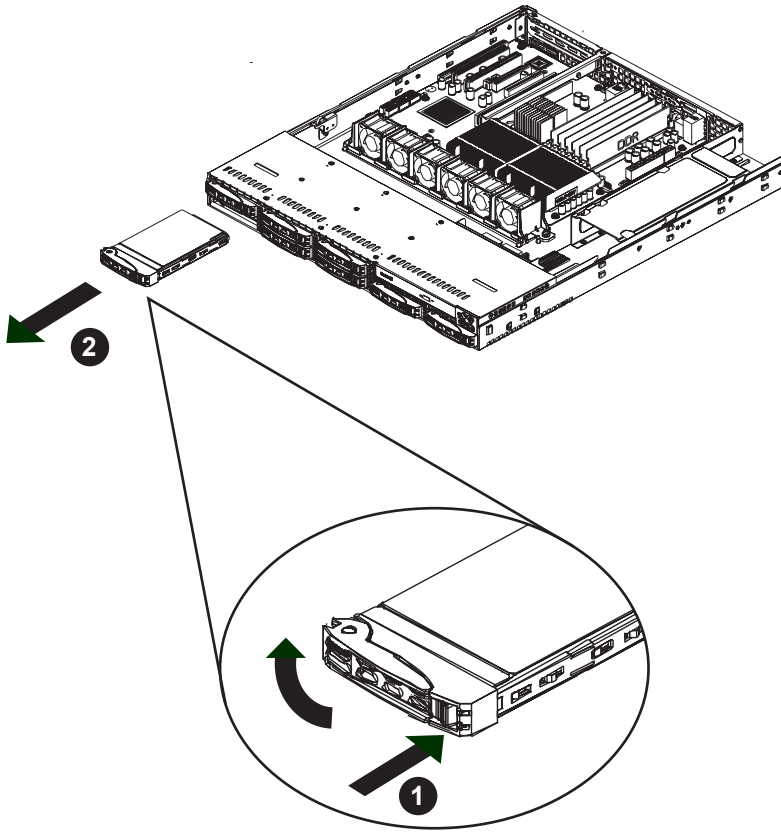

Figure 4-2. Removing Hard Drive Carriers

The SC113M chassis supports eight hot-swappable 2.5" hard drives mounted in drive carriers which can be removed from the chassis without powering down the system. Only enterprise level hard drives are recommended for use in Supermicro chassis.

Removing Hard Drive Trays from the Chassis

1. Press the release button on the drive carrier. This extends the drive carrier handle.

2. Use the handle to pull the drive carrier out of the chassis.

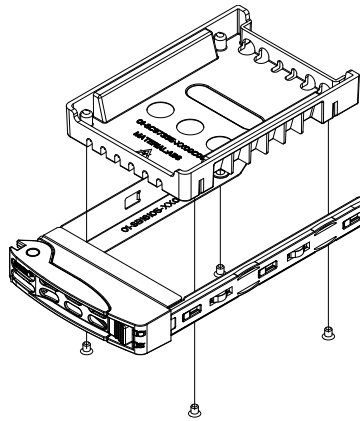

Figure 4-3. Removing the Dummy Drive From the Carrier

Installing a Hard Drive into a Carrier

1. Remove the four screws securing the dummy drive to the hard drive carrier and set them aside for later use.

2. Lift the dummy drive up and out of the carrier.

3. Insert a drive into the carrier with the printed circuit board side facing downward, with the connector oriented at the rear of the carrier.

4. Align the drive in the carrier so that the mounting holes in the drive align with the mounting holes in the carrier. Note that there are holes in the carrier marked “SATA” to aid in correct installation of the drive.

5. Secure the drive to the carrier with four screws previously set aside.

6. Insert the drive carrier into the chassis drive bay, keeping the carrier oriented so that the hard drive is on the top of the carrier and the release button is on the right side. When the carrier reaches the back of the drive bay, the release handle will retract.

7. Push the handle in until the drive carrier clicks into the locked position.

4-5 Installing the Motherboard

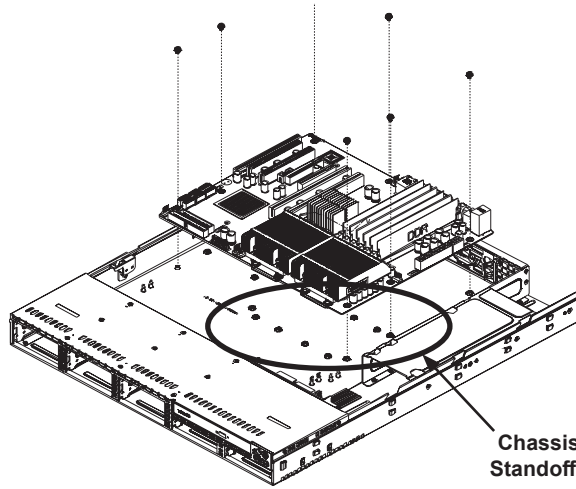

Figure 4-4. Chassis Standoffs

Permanent and Optional Standoffs

Standoffs prevent short circuits by creating space between the motherboard and the chassis floor. The SC113M chassis includes permanent standoffs in locations used by most motherboards. These standoffs accept the rounded Phillips head screws included in the SC113M accessories packaging.

Some motherboards require additional screws for heatsinks, general components and/or non-standard components. Optional standoffs are included for these motherboards. To use an optional standoff, you must place the hexagonal screw through the bottom the chassis and secure the screw with the hexagon nut (rounded side up).

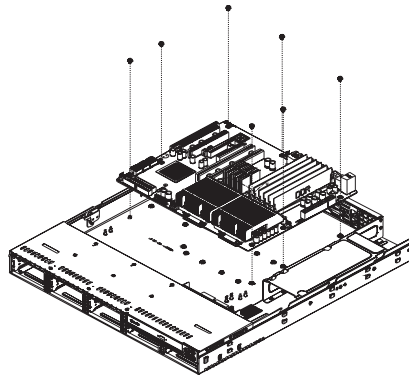

Figure 4-5. Installing the Motherboard

Installing the Motherboard

Installing the Motherboard

1. Review the documentation that came with your motherboard. Become familiar with component placement, requirements, precautions, and cable connections.

2. Power down the system and remove the power cord from the rear of the power supply as described in Section 4-2. Open the chassis cover as described in Section 4-3.

3. Compare the mounting holes in the motherboard to those in the floor of the chassis. Add or remove standoffs as needed. To do this, place a hexagonal standoff screw through the bottom the chassis and secure the screw with a hexagon nut with the rounded side up.

4. Lay the motherboard in the chassis, aligning it with the permanent and optional standoffs

5. Secure the motherboard to the chassis using the rounded, Phillips head screws.

6. Secure the CPU(s), heatsinks, and other components to the motherboard as described in the motherboard documentation.

7. Connect the cables between the motherboard, backplane, chassis, front panel, and power supply, as needed. Also, the fans may be temporarily removed to allow access to the backplane ports.

Expansion Card Setup

The SC113M chassis includes one full-height PCI slot for an expansion card. You must use a riser card to install expansion cards into the chassis. Riser cards are sold separately.

Note: Chassis models SC113MFAC2-605CB and SC113M-606CB require a short length riser card bracket. This bracket is part number MCP-120-00078-0N. See the following section of this manual for details on installing full-length and short-length riser card brackets.

For the latest compatibility and performance information, visit our website at: http://www.supermicro.com.

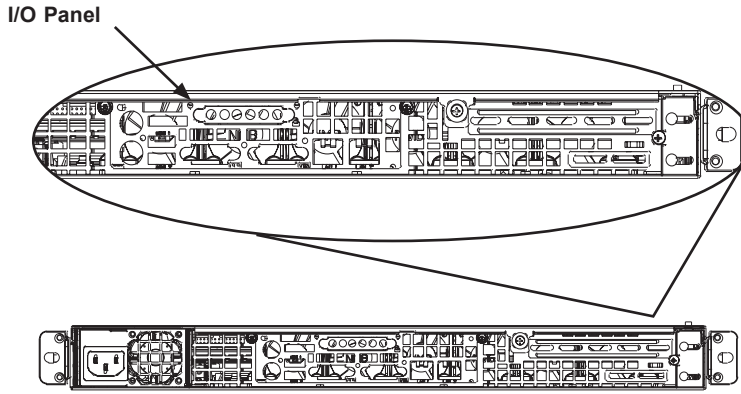

Figure 4-6. SC113M Chassis Rear View with Two Full Height/Full Length PCI Slots and One Low-Profile PCI Slot

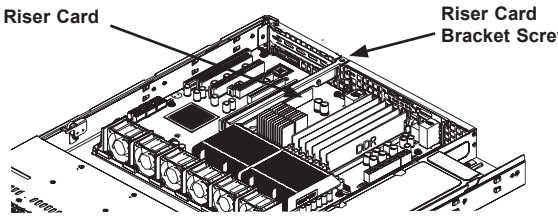

Figure 4-7. Installing an Expansion Card with a Full-Length Bracket

Installing an Expansion Card with a Short or Full-Length Bracket

1. Confirm that you have the correct riser card for your chassis model and that the expansion card includes a standard mounting bracket.

2. Power down the system and remove the power cord from the rear of the power supply as described in Section 4-2. Open the chassis cover as described in Section 4-3.

3. Remove the screw securing the short or full-length riser card bracket to the chassis. Lift the bracket up and out of the chassis.

4. Install the riser card onto the short or full-length bracket. Insert the card into the appropriate slot on the motherboard. Secure the bracket to the chassis using screws as illustrated.

5. Select the PCI slot in which to place the expansion card.

6. Open the PCI slot panel lever and slide the slot cover sideways to remove it.

7. Simultaneously slide the expansion card into the riser card and slide the expansion card bracket into the PCI slot.

8. Secure the expansion card by closing the PCI slot lever.

9. Connect cables to the expansion card if necessary.

10. Replace the chassis cover, plug the power cord into the rear of the power supply and power up the system.

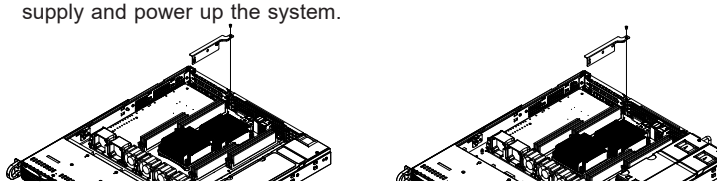

CSE-113MFAC2-605CB **CSE-113MFAC2-R606CB**

Figure 4-8. Installing Expansion Cards with Short-Length Brackets

4-6 Removing the Backplane

The SC113M chassis backplane is located behind the hard drives and in front of the front system fans. In order to change the jumper settings on the backplane, it may be necessary to remove the backplane from the chassis.

Removing the Backplane from the Chassis

1. Power down the system and remove the power cord from the rear of the power supply as described in Section 4-2. Open the chassis cover as described in Section 4-3.

2. Disconnect the cabling to the backplane.

3. Remove the five upper screws at the top of the backplane, indicated by the arrows below.

4. Lift the backplane up and out of the chassis.

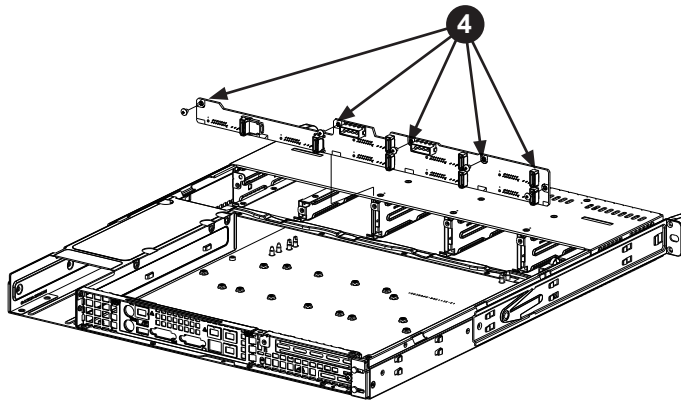

Figure 4-9. Removing the Screws at the Top of the Backplane

4-7 Backplane Installation

Installing the Backplane

1. Slide the backplane into the chassis as shown, inserting the lower edge of the backplane into the clips on the floor of the chassis.

2. Align the mounting holes in the backplane with the mounting holes in the chassis

3. Secure the backplane to the chassis using the five screws provided with the backplane.

4. Connect the wiring to the backplane.

5. Replace the chassis cover, plug the power cord into the rear of the power supply and power up the system.

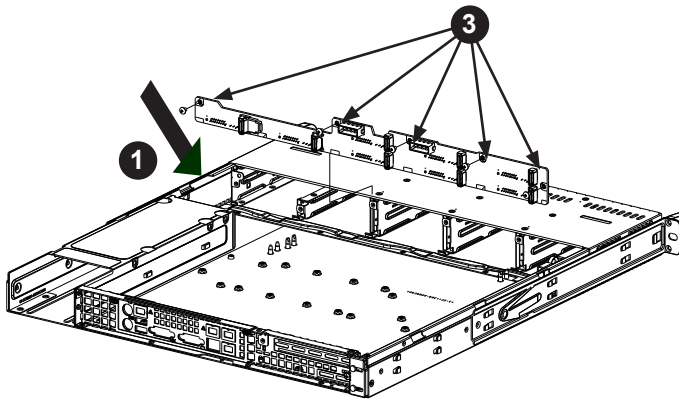

Figure 4-10. Installing the Backplane

4-8 Installing the Air Shroud

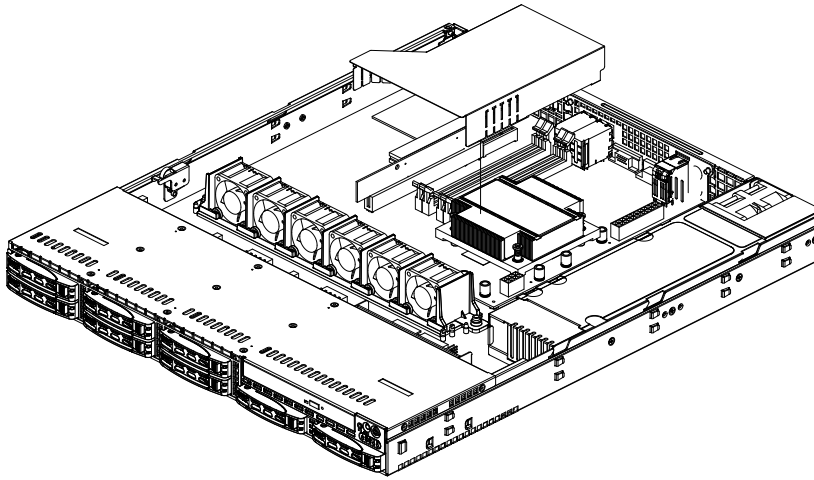

Figure 4-11. Air Shroud Installation

Air shrouds concentrate airflow to maximize fan efficiency. The SC113M chassis air shroud does not require screws to set up.

Installing the Air Shroud

1. Power down the system and remove the power cord from the rear of the power supply. Open the chassis cover as described in Section 4-3.

2. If necessary, move any cables that interfere with the air shroud placement.

3. Place the air shroud in the chassis. The air shroud fits just behind the three fans in the fan rack. Slide the air shroud into the grooves just behind the fan rack.

4. Replace the chassis cover, plug the power cord into the rear of the power supply and power up the system.

4-9 Checking the Airflow

Checking the Server's Airflow

1. Make sure there are no objects to obstruct airflow in and out of the server. In addition, if you are using a front bezel, make sure the bezel's filter is replaced periodically.

2. Do not operate the server without drives or drive trays in the drive bays. Use only recommended server parts.

3. Make sure no wires or foreign objects obstruct air flow through the chassis. Pull all excess cabling out of the airflow path or use shorter cables.

The control panel LEDs inform you of system status. See “Chapter 3: System Interface” for details on the LEDs and the control panel buttons.

Completing the Installation

In most cases, the chassis power supply and fans are pre-installed. If you need to install fans, continue to the System Fans section of this chapter. If the chassis will be installed into a rack, continue to the next chapter for rack installation instructions.

4-10 System Fans

The SC113M chassis includes four heavy-duty fans, with open slots for two additional fans, to provide cooling for the chassis. These fans circulate air through the chassis and lower the internal temperature within the chassis.

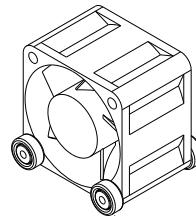

Figure 4-12. System Fan

Four heavy-duty fans provide cooling for the chassis. These fans circulate air through the chassis as a means of lowering the chassis' internal temperature.

The SC113M chassis contains counter-rotating fans. Each fan unit is actually made up of two fans joined back-to-back, which rotate in opposite directions. This counter-rotating action generates exceptional airflow and works to dampen vibration levels.

The SC113M chassis provides two additional open fan housings, where additional system fans may be added for optimal cooling.

Adding a System Fan

1. Power down the system and remove the power cord from the rear of the power supply. Open the chassis cover as described in Section 4-3.

2. Remove the screws securing the fan tray to the chassis.

3. Remove the dummy fan from the fan tray by pushing it up from the bottom.

4. Place the new fan into the vacant space in the housing while making sure the arrows on the top of the fan (indicating air direction) point in the same direction as the arrows on the other fans.

5. Secure the fan tray to the chassis using the screws removed previously.

6. Connect the fan wires to the fan headers on the serverboard.

7. Power-up the system and check that the fan is working properly before replacing the chassis cover.

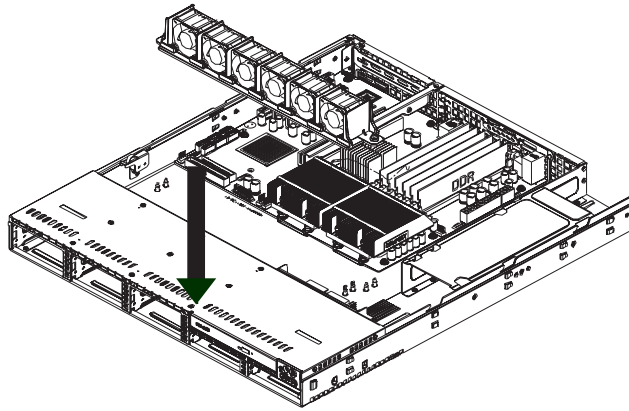

Figure 4-13. Installing the Fan Tray into the Chassis

The SC113M chassis includes four pre-installed fans. Two additional open slots are available so that up to two more fans may be added.

Replacing a System Fan

1. If necessary, open the chassis while the power is running to determine which fan has failed. Never run the server for an extended period of time with the chassis open.

2. Power down the system and remove the power cord from the rear of the power supply as described in Section 4-2. Open the chassis cover as described in Section 4-3.

3. Remove the failed fan's power cord from the serverboard.

4. Unscrew the fan tray from the chassis and push the failed fan from the up from the bottom of the tray.

5. Place the new fan into the vacant space in the housing while making sure the arrows on the top of the fan (indicating air direction) point in the same direction as the arrows on the other fans.

6. Reconnect the fan wires to the exact same chassis fan headers as the previous fan.

7. Power up the system and check that the fan is working properly before replacing the chassis cover.

4-11 Power Supply

The SC113M chassis has either a fixed 330, 560 or 600 Watt power supply or a redundant 400 or 600 Watt power supply. These power supplies are auto-switching capable, enabling it to automatically sense and operate at a 100v to 240v input voltage. An amber light will be illuminated on the power supply when the power is off. An illuminated green light indicates that the power supply is operating.

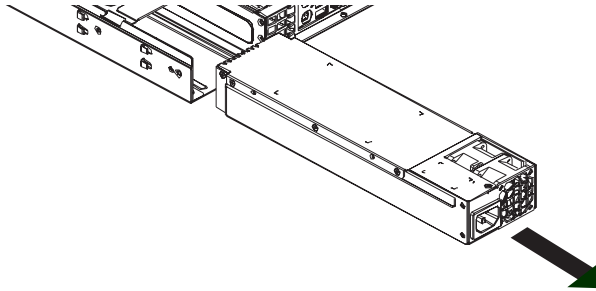

Figure 4-14. Removing a Fixed Power Supply

Replacing a Fixed Power Supply

Your SC113MTQ-330CB, SC113MTQ-563CB, SC113MTQ-600CB or SC113MFAC2-605CB chassis includes a single, fixed power supply. The system must be completely shut down when replacing the power supply.

Replacing a Fixed Power Supply

1. Power down the system and remove the power cord from the rear of the power supply as described in Section 4-2. Open the chassis cover as described in Section 4-3.

2. Remove the two screws, located on the underside of the chassis, which secure the power supply to the chassis. Set these aside for later use.

3. Gently slide the power supply forward and out the back of the chassis.

4. Replace the failed power module with another of the same model.

5. Slide the new power supply module into the power bay and secure it from the underside of the chassis, using the two screws which were previously set aside.

6. Replace the chassis cover, plug the power cord into the rear of the power supply and power up the system.

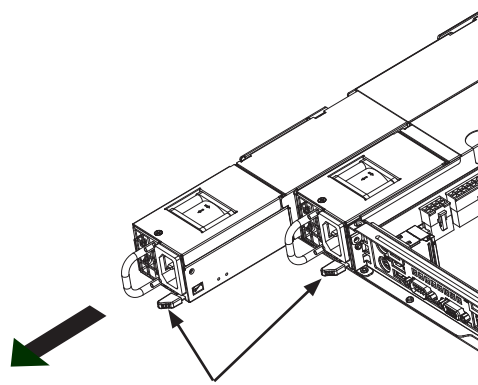

Figure 4-15. Removing a Redundant Power Supply

Replacing a Redundant Power Supply

Your SC113MFAC2-R606CB and SC113MTQ-R400CB chassis include a redundant power supply (two power modules). You can leave the server running and remove only one power supply at a time.

Replacing a Redundant Power Supply

1. Push the release tab (on the back of the power supply) as illustrated.
2. Pull the power supply out using the handle provided.
3. Replace the failed power module with another of the same model.
4. Push the new power supply module into the power bay until it clicks into the locked position.

Notes

Chapter 5

Rack Installation

5-1 Overview

This chapter provides a quick setup checklist to get your chassis up and running. Following these steps in the order given should enable you to have the system operational within a minimum amount of time.

5-2 Unpacking the System

You should inspect the box the chassis was shipped in and note if it was damaged in any way. If the chassis itself shows damage you should file a damage claim with the carrier who delivered it.

Decide on a suitable location for the rack unit that will hold your chassis. It should be situated in a clean, dust-free area that is well ventilated. Avoid areas where heat, electrical noise and electromagnetic fields are generated. You will also need it placed near a grounded power outlet. Be sure to read the Rack and Server Precautions in the next section.

5-3 Preparing for Setup

The box your chassis was shipped in should include two sets of rail assemblies, two rail mounting brackets and the mounting screws you will need to install the system into the rack. Please read this section in its entirety before you begin the installation procedure outlined in the sections that follow.

Choosing a Setup Location

- Leave enough clearance in front of the rack to enable you to open the front door completely (~25 inches).
- Leave approximately 30 inches of clearance in the back of the rack to allow for sufficient airflow and ease in servicing.
- This product is for installation only in a Restricted Access Location (dedicated equipment rooms, service closets and the like).

Warnings and Precautions!

Rack Precautions

- Ensure that the leveling jacks on the bottom of the rack are fully extended to the floor with the full weight of the rack resting on them.
- In single rack installation, stabilizers should be attached to the rack.
- In multiple rack installations, the racks should be coupled together.
- Always make sure the rack is stable before extending a component from the rack.
- You should extend only one component at a time - extending two or more simultaneously may cause the rack to become unstable.

General Server Precautions

- Review the electrical and general safety precautions that came with the components you are adding to your chassis.
- Determine the placement of each component in the rack *before* you install the rails.
- Install the heaviest server components on the bottom of the rack first, and then work up.
- Use a regulating uninterruptible power supply (UPS) to protect the server from power surges, voltage spikes and to keep your system operating in case of a power failure.
- Allow the hot plug hard drives and power supply modules to cool before touching them.
- Always keep the rack's front door and all panels and components on the servers closed when not servicing to maintain proper cooling.

Rack Mounting Considerations

Ambient Operating Temperature

If installed in a closed or multi-unit rack assembly, the ambient operating temperature of the rack environment may be greater than the ambient temperature of the room. Therefore, consideration should be given to installing the equipment in an environment compatible with the manufacturer's maximum rated ambient temperature (TMRA).

Reduced Airflow

Equipment should be mounted into a rack so that the amount of airflow required for safe operation is not compromised.

Mechanical Loading

Equipment should be mounted into a rack so that a hazardous condition does not arise due to uneven mechanical loading.

Circuit Overloading

Consideration should be given to the connection of the equipment to the power supply circuitry and the effect that any possible overloading of circuits might have on overcurrent protection and power supply wiring. Appropriate consideration of equipment nameplate ratings should be used when addressing this concern.

Reliable Ground

A reliable ground must be maintained at all times. To ensure this, the rack itself should be grounded. Particular attention should be given to power supply connections other than the direct connections to the branch circuit (i.e. the use of power strips, etc.).

To prevent bodily injury when mounting or servicing this unit in a rack, you must take special precautions to ensure that the system remains stable. The following guidelines are provided to ensure your safety:

- This unit should be mounted at the bottom of the rack if it is the only unit in the rack.
- When mounting this unit in a partially filled rack, load the rack from the bottom to the top with the heaviest component at the bottom of the rack.
- If the rack is provided with stabilizing devices, install the stabilizers before mounting or servicing the unit in the rack.

5-4 Rack Mounting Instructions

This section provides information on installing the SC113M chassis into a rack unit with the rails provided. There are a variety of rack units on the market, which may mean the assembly procedure will differ slightly. You should also refer to the installation instructions that came with the rack unit you are using.

Note: This rail will fit a rack between 26" and 33.5" deep.

Identifying the Sections of the Rack Rails

The chassis package includes two rack rail assemblies in the rack mounting kit. Each assembly consists of two sections: an inner rail and an outer rail.

Inner Rails

The inner rail comes preinstalled on the chassis and no assembly is required.

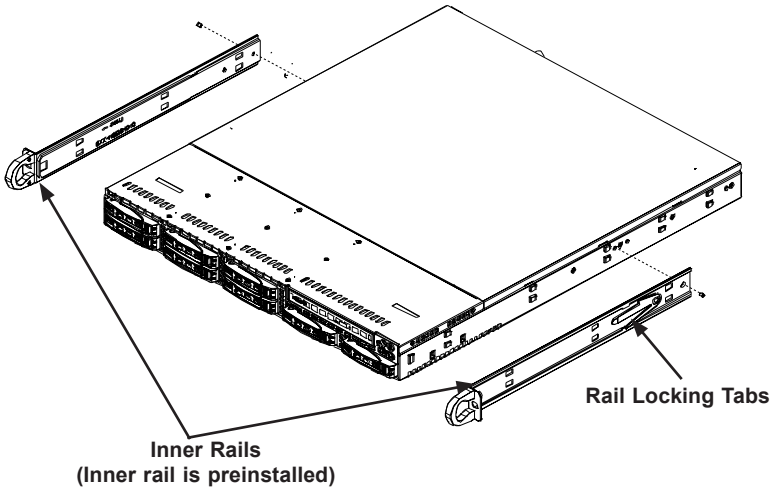

Figure 5-1. Inner Rails

Locking Tabs

Both chassis rails have a locking tab. The tabs lock the server into place when installed and pushed fully into the rack. These tabs also lock the server in place when fully extended from the rack. This prevents the server from coming completely out of the rack when you pull it out for servicing.

Warning: do not pick up the server by the front handles. They are designed to pull the system from a rack only.

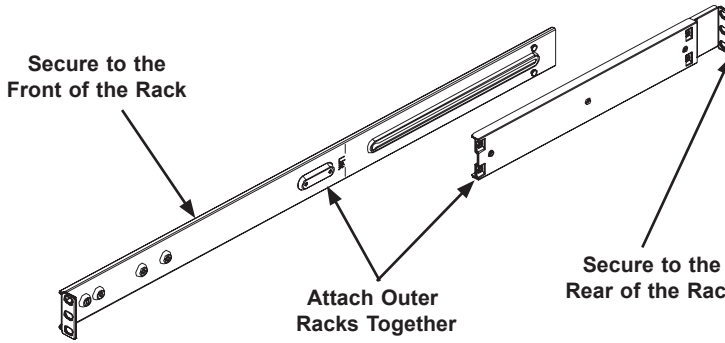

Figure 5-2. Assembling the Outer Rails

Outer Rails

Outer rails attach to the server rack and hold the server in place. The outer rails for the SC113M chassis extend between 30 inches and 33 inches.

Installing the Outer Rails to the Rack

1. Attach the short bracket to the outside of the long bracket. You must align the pins with the slides. Also, both bracket ends must face the same direction.

2. Adjust both the short and long brackets to the proper distance so that the rail fits snugly into the rack.

3. Secure the long bracket to the front side of the outer rail with two M5 screws and the short bracket to the rear side of the outer rail with three M5 screws.

4. Repeat steps 1-4 for the left outer rail.

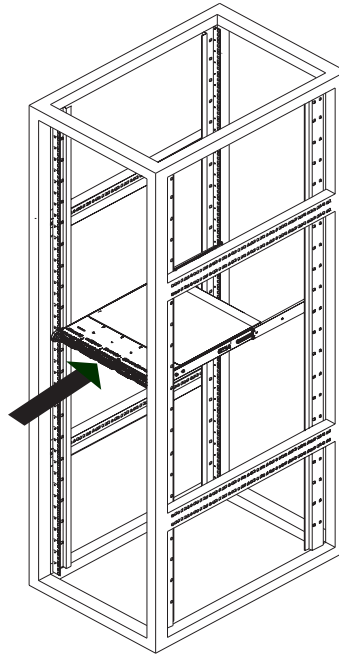

Figure 5-3. Installing into a Rack

Installing the Chassis into a Rack

1. Confirm that chassis includes the inner rails and rail extensions (B). Also, confirm that the outer rails are installed on the rack.

2. Line chassis rails with the front of the rack rails.

3. Slide the chassis rails into the rack rails, keeping the pressure even on both sides (you may have to depress the locking tabs when inserting). When the server has been pushed completely into the rack, you should hear the locking tabs "click".

4. (Optional) Insert and tightening the thumbscrews that hold the front of the server to the rack.

Stability hazard. The rack stabilizing mechanism must be in place, or the rack must be bolted to the floor before you slide the unit out for servicing. Failure to stabilize the rack can cause the rack to tip over.

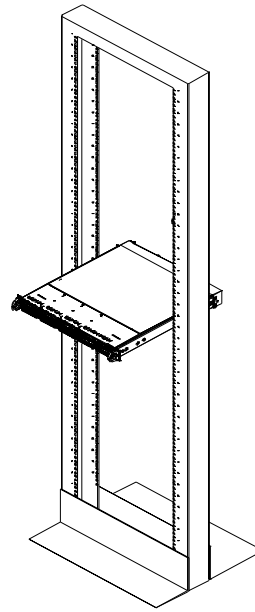

Figure 5-4. Installing into an Open Rack

Installing the Chassis into a Rack in Mid-Mount Position

1. If necessary, remove the chassis rails and the chassis ears, if the ears are installed at the front of the chassis.

2. Locate the three screw holes in the middle of the chassis and secure the ears to the chassis with three flat head screws. Make sure the screws are secure, but do not over-tighten the screws.

3. Hold the chassis in the telco rack and screw the chassis to the rack using the three screw holes located in the chassis ears.

The chassis is held in place by the chassis ears and does not slide in and out of place.

Stability hazard. The rack stabilizing mechanism must be in place, or the rack must be bolted to the floor before you slide the unit out for servicing. Failure to stabilize the rack can cause the rack to tip over.

Notes

Appendix A

SC113M Chassis Cables

A-1 Overview

This appendix lists supported cables for your chassis system. It only includes the most commonly used components and configurations. For more compatible cables,

A-2 Cables Included with SC113M Chassis (SAS/SATA)

SC113M			
Part #	**Type**	**Length**	**Description**
CBL-0335L	HDD Cable	48cm	Front control cable 20-pin to 20-pin with tube, 73 cm, PBF. 28 AWG
CBL-0206L	SATA Cable	48cm	SATA cable

A-3 Compatible Cables

These cables are compatible with the SC113M Chassis.

This section lists cables included with the SC113M Chassis packages.

Alternate SAS/SATA Cables

Some compatible motherboards have different connectors. If your motherboard has only one SAS connector that the SAS/SATA cables must share, use one of the following cables. These cables must be purchased separately.

Cable Name: SAS Cable **Quantity:** 1

Part #: CBL-0175L
Alt. Name: "Big Four"

Description: This cable has one SFF-8484 (32 pin) connector on one end and 4 SAS connectors (7 pins each) at the other. This cable connects from the Host (motherboard or other controller) to the backplane SAS hard drive port.

Cable Name: SAS Cable **Quantity:** 1

Part #: CBL-0116
Alt. Name: iPass or "Small Four"

Description: This cable has one ipass (SFF-8087/mini-sas) connector (36 pins) at one end and 4 SAS connectors on one end. This cable connects from the Host (motherboard or other controller) to the backplane SAS hard drive port.

Extending Power Cables

Although Super Micro chassis are designed with to be efficient and cost-effective, some compatible motherboards have power connectors located in different areas.

To use these motherboards you may have to extend the power cables to the mother boards. To do this, use the following chart as a guide.

Power Cable Extenders		
Number of Pins	**Cable Part #**	**Length**
24-pin	CBL - 0042	7.9” (20 cm
20-pin	CBL - 0059	7.9” (20 cm)
8-pin	CBL - 0062	7.9” (20 cm)
4-pin	CBL - 0060	7.9” (20 cm)

Front Panel to the Motherboard

The SC113M chassis includes a cable to connect the chassis front panel to the motherboard. If your motherboard uses a different connector, use the following list to find a compatible cable.

Front Panel to Motherboard Cable (Ribbon Cable)		
Number of Pins (Front Panel)	**Number of Pins (Motherboard)**	**Cable Part #**
16-pin	16-pin	CBL - 0049
16-pin	20-pin	CBL - 0048
20-pin	20-pin	CBL - 0047
16-pin	Split*	CBL - 0068
20-pin	Split*	CBL - 0067

* Split Cables: Use these cables if your motherboard has different pin definitions than a Supmicro motherboard.

Notes

Appendix B
SC113M Power Supply Specifications

This appendix lists power supply specifications for your chassis system.

SC113MFAC2-R606CB	
	600W
MFR Part #	PWS-606P-1R
Total Output Power and Input	100-240 Vac
AC Input Frequency	50-60Hz
+5V standby	Max: 3 Amp/Min: 0A
+12V	Max: 50A / Min: 0.5A (100Vac - 240Vac)

SC113MTQ-600CB, SC113MFAC2-605CB	
	600W
MFR Part #	PWS-605P-1H
Total Output Power and Input	100-240 V
AC Input Frequency	50-60Hz
+5V	Max: 18 Amp/ Min: 0.5 Amp
+5V standby	Max: 3 Amp / Min: 0 Amp
+12V	Max: 49 Amp / Min: 0.5 Amp (100Vac - 240Vac)
-12V	Max: 0.5 Amp/Min: 0 Amp
+3.3V	Max: 15 Amp / Min: 0.5 Amp

SC113MTQ-563CB	
	560W
MFR Part #	PWS-563-1H
AC Voltage	100-240 V, 50-60 Hz, 7.5 Amp max
+5V	15 Amp
+5V standby	2 Amp
+12V	46.5 Amp
-12V	0.5 Amp
+3.3V	15 Amp

SC113MTQ-400CB	
	400W
MFR Part #	PWS-406P-1R
AC Input	400W: 100-240 V 50-60 Hz 6-3 Amp
DC Output +5V standby	3 Amp
DC Output +12V	33 Amp
With Power Distributor	+5V: 25 Amp +3.3V: 25 Amp -12V: 0.6 Amp

SC113MTQ-330CB	
	330W
MFR Part #	PWS-333-1H
AC Voltage	100-240 V 50-60 Hz 4.5 Amp max
+5V	18 Amp
+5V standby	3 Amp
+12V	27 Amp @ 100-180Vac, 31 Amp @ 180-240 Vac
-12V	0.5 Amp
+3.3V	15 Amp

Appendix C

BPN-SAS-113TQ Backplane Specifications

To avoid personal injury and property damage, carefully follow all the safety steps listed below when accessing your system or handling the components.

C-1 ESD Safety Guidelines

Electrostatic Discharge (ESD) can damage electronic components. To prevent damage to your system, it is important to handle it very carefully. The following measures are generally sufficient to protect your equipment from ESD.

- Use a grounded wrist strap designed to prevent static discharge.
- Touch a grounded metal object before removing a component from the antistatic bag.
- Handle the backplane by its edges only; do not touch its components, peripheral chips, memory modules or gold contacts.
- When handling chips or modules, avoid touching their pins.
- Put the card and peripherals back into their antistatic bags when not in use.

C-2 General Safety Guidelines

- Always disconnect power cables before installing or removing any components from the computer, including the BPN-SAS-113TQ backplane.
- Disconnect the power cable before installing or removing any cables from the backplane.
- Make sure that the BPN-SAS-113TQ backplane is securely and properly installed on the motherboard to prevent damage to the system due to power shortage.

C-3 An Important Note to Users

All images and layouts shown in this user's guide are based upon the latest backplane revision available at the time of publishing. The card you have received may or may not look exactly the same as the graphics shown in this manual.

C-4 Introduction to the BPN-SAS-113TQ Backplane

The BPN-SAS-113TQ backplane has been designed to utilize the most up-to-date technology available, providing your system with reliable, high-quality performance.

This manual reflects BPN-SAS-113TQ Revision 1.02, the most current release available at the time of publication. Always refer to the Supermicro website at www.supermicro.com for the latest updates, compatible parts and supported configurations.

Connectors, Jumpers and LEDs

C-5 Rear Connectors

The following connectors are on the side of the backplane that faces the rear of the chassis. They are marked by silkscreen labels.

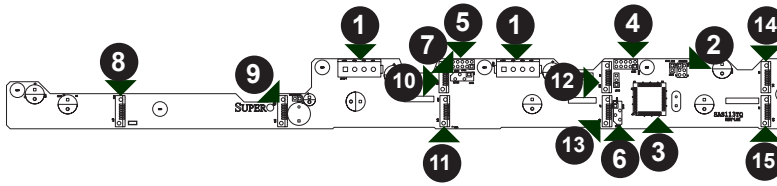

Figure C-1. Rear Connectors

Rear Connectors and Jumpers

1. Power Connectors (4-pin): JP10, JP13
2. Upgrade Pin: JP46
3. MG9072 Chip
4. Sideband #1: JP51
5. Sideband #2: JP52
6. I^2C Connector #1: JP44
7. I^2C Connector #2: JP45
8. Connector #7: J16
9. Connector #6: J14
10. Connector #5: J12
11. Connector #4: J10
12. Connector #3: J8
13. Connector #2: J7
14. Connector #1: J6
15. Connector #0: J5

C-6 Rear Connector and Pin Definitions

#1. Backplane Main Power Connectors

The 4-pin connectors designated JP10, provide power to the backplane. See the table on the right for pin definitions.

Backplane Main Power 4-Pin Connector	
Pin#	Definition
1	+12V
2 and 3	Ground
4	+5V

#2 Upgrade Connector

The Upgrade connector, designated JP46 is for diagnostic purposes only. This connector should only be used by a certified and experienced technician.

#3. MG9072 Chip

The MG9072 is an enclosure management chip that supports the SES-2 controller and SES-2 protocols.

#4 and #5. Sideband Headers

The sideband headers are designated JP51 and JP52. For SES-2 to work properly, you must connect an 8-pin sideband cable. See the table to the right for pin definitions.

Sideband Headers			
Pin #	Definition	Pin #	Definition
2	SDIN/ Backplane Addressing (SB5)	1	Controller ID (SB6)
4	SDOUT/I²C Reset (SB4)	3	GND (SB2)
6	GND (SB3)	5	SLOAD/ SDA (SB1)
8	Backplane ID (SB7)	7	SCLOCK/ SCL (SB0)
10	No Connection	9	No Connection

#6 and #7. I²C Connectors

The I²C Connectors, designated JP44 and JP45, are used to monitor HDD activity and status. See the table on the right for pin definitions.

I²C Connector Pin Definitions	
Pin#	Definition
1	Data
2	Ground
3	Clock
4	No Connection

#8 - #15. SAS/SATA Connectors

The SAS/SATA connectors are numbered 0 through 7. Each may be connected to the system with a SAS or SATA cable.

C-7 Rear Jumper Locations and Pin Definitions

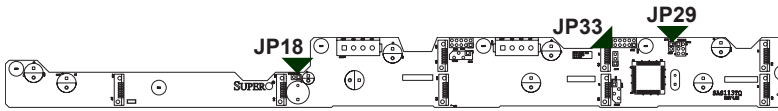

Figure C-2. Rear Jumpers

Explanation of Jumpers

To modify the operation of the backplane, jumpers can be used to choose between optional settings. Jumpers create shorts between two pins to change the function of the connector. Pin 1 is identified with a square solder pad on the printed circuit board. Note: On two pin jumpers, "Closed" means the jumper is on and "Open" means the jumper is off the pins.

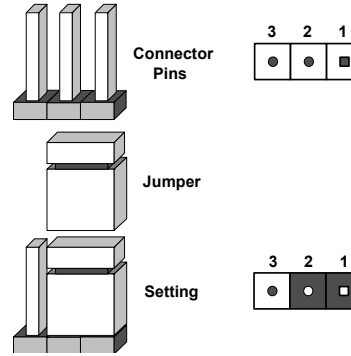

Jumper Settings		
Jumper	**Jumper Settings**	**Note**
JP18	Open: Default Closed: Reset	Buzzer reset*
JP29	Open: Default Closed: Reset	MG9072 chip reset

*The buzzer sound indicates that a condition requiring immediate attention has occurred.

The buzzer alarm is triggered by the following conditions:

1. Hard drive failure

2. System temperature over 45º Celsius.

I²C and SGPIO Modes and Jumper Settings

This backplane can utilize I²C or SGPIO. SGPIO is the default mode and can be used without making changes to your jumpers. The following information details which jumpers must be configured to use I²C mode or restore your backplane to SGPIO mode.

I²C and SGPIO Settings			
Jumper	**I²C Jumper Setting**	**SGPIO Jumper Setting (Default)**	**Note**
JP33	2-3	1-2	Controller ID

Rear LED Indicator

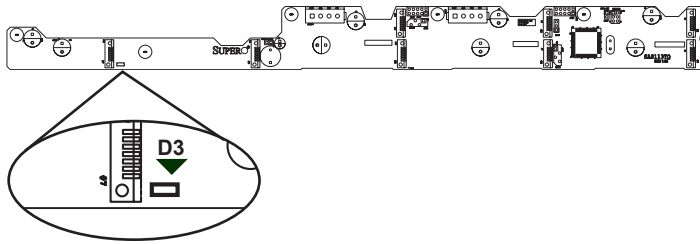

Figure C-3. Rear LED

Rear LED		
LED	**State**	**Specification**
D3	On	Overheat or Drive Failure

C-8 Front Connectors and LED Indicators

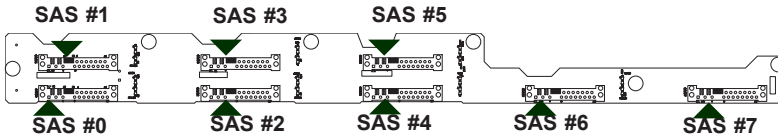

Figure C-4. Front Connectors

Rear SAS/SATA Connectors		
Rear Connector	**Connector Number**	**SAS/SATA Drive Number**
SAS #0	J1	SAS/SATA HDD #0
SAS #1	J2	SAS/SATA HDD #1
SAS #2	J3	SAS/SATA HDD #2
SAS #3	J4	SAS/SATA HDD #3
SAS #4	J9	SAS/SATA HDD #4
SAS #5	J11	SAS/SATA HDD #5
SAS #6	J13	SAS/SATA HDD #6
SAS #7	J15	SAS/SATA HDD #7

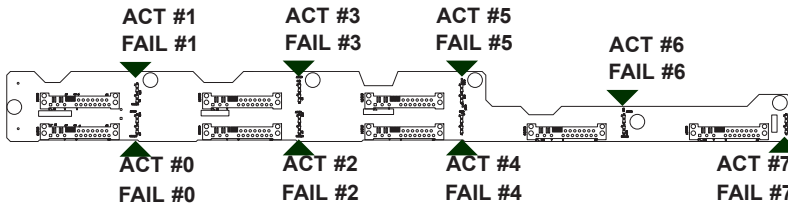

Figure C-5. Front LEDs

Front LED Indicators		
Rear Connector	**Hard Drive Activity**	**Failure LED**
SAS #0	D12	D5
SAS #1	D13	D6
SAS #2	D14	D7
SAS #3	D15	D8
SAS #4	D18	D19
SAS #5	D21	D20
SAS #6	D22	D23
SAS #7	D25	D26

Appendix D

BPN-SAS3-113A-N2 Backplane Specifications

This chapter offers guidelines for personal and equipment safety, and notes about the BPN-SAS3-113A-N2 version documented in this manual.

D-1 ESD Safety Guidelines

Electrostatic Discharge (ESD) can damage electronic components. To prevent damage to your system, it is important to handle it very carefully. The following measures are generally sufficient to protect your equipment from ESD.

- Use a grounded wrist strap designed to prevent static discharge.
- Touch a grounded metal object before removing a component from the antistatic bag.
- Handle the backplane by its edges only; do not touch its components, peripheral chips, memory modules or gold contacts.
- When handling chips or modules, avoid touching their pins.
- Put the card and peripherals back into their antistatic bags when not in use.

D-2 General Safety Guidelines

- Always disconnect power cables before installing or removing any components from the computer, including the backplane.
- Disconnect the power cable before installing or removing any cables from the backplane.
- Make sure that the backplane is securely and properly installed on the motherboard to prevent damage to the system due to power shortage.

D-3 Version Information

The BPN-SAS3-113A-N2 backplane has been designed to utilize the most up-to-date technology available, providing your system with reliable, high-quality performance.

This manual reflects BPN-SAS3-113A-N2, Revision 1.10, the most current release available at the time of publication. Refer to the Supermicro website at www.supermicro.com for the latest updates, compatible parts and supported configurations.

D-4 Rear Connector Locations

The following connectors are on the side of the backplane that faces the rear of the chassis. They are marked by silkscreen labels.

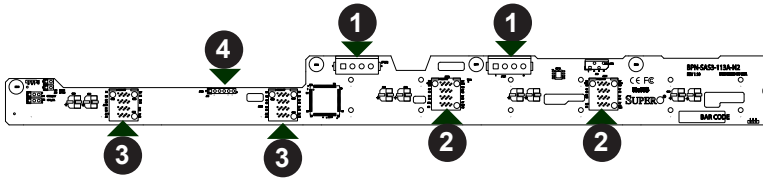

Figure D-1. Rear Connector Locations

1. Power Connectors: JPW1, JPW2 (4-pin)
2. SAS3 Connectors: JSM1, JSM2
3. NVMe Connectors: JSM3, JSM4
4. JTAG CPLD Upgrade Port (6-pin): J10

D-5 Rear Connector Definitions

1. Backplane Main Power Connectors

The 4-pin connectors, designated JPW1 and JPW2, provide power to the backplane. See the table on the right for pin definitions.

Main Power 4-Pin Connector	
Pin#	Definition
1	+12V
2 and 3	Ground
4	+5V

2. SAS3 Connectors

JSM1 and JSM2 provide connections for the SAS drive cables. Pins are defined according the SAS standard.

3. NVMe Connectors

Two NVMe connectors are used to connect the NVMe drive cables. Each connector controls one NVMe SSD. Pins are defined according the NVMe standard.

4. JTAG CPLD Upgrade Port

The JTAG connector is designated J10 and is for manufacturer use only.

.

D-6 Rear Jumpers

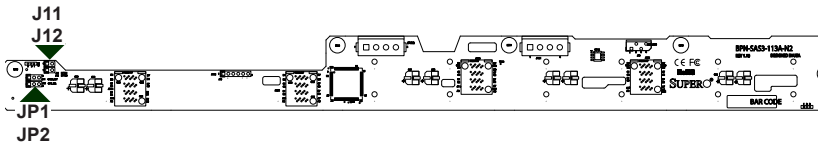

Figure D-2. Rear Jumpers

Jumper Settings		
Jumper	**Settings**	**Note**
JP1	Not installed	Used only by manufacturing
JP2	1-2: Connects NVMe#0 to CPU1, and NVMe#1 to CPU2 2-3 (default): NVMe#0 and #1 to single CPU)	NVMe mapping to CPU, CPU1 or CPU2
J11, J12	Open	Reserved for future applications

Explanation of Jumpers

To modify the operation of the backplane, jumpers can be used to choose between optional settings. Jumpers create shorts between two pins to change the function of the connector. Pin 1 is identified with a square solder pad on the printed circuit board. **Note**: On two pin jumpers, "Closed" means the jumper is on and "Open" means the jumper is off the pins.

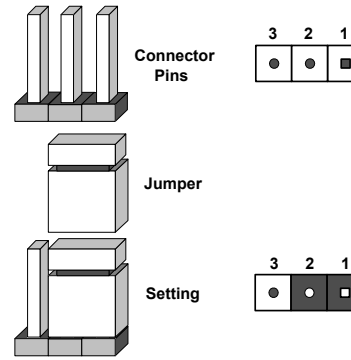

D-7 Front Connectors and LED Indicators

Connectors for SAS drive numbers #0 through #7 are SAS3. SAS #8 and #9 are hybrid ports that support SAS2 or NVMe.

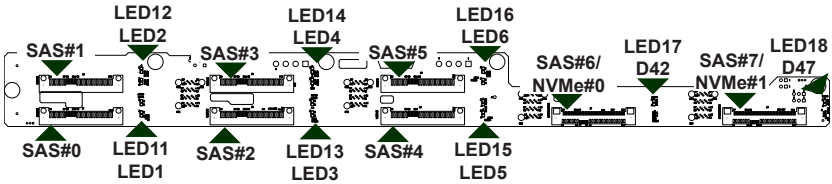

Figure D-3. Front Connectors and LEDs

Front SAS/SATA Connectors and LED Indicators			
Drive Number	**Label**	**HDD Activity LED (Blue)**	**Failure LED (Red)**
SAS #0	J1	LED11	LED1
SAS #1	J2	LED12	LED2
SAS #2	J3	LED13	LED3
SAS #3	J4	LED14	LED4
SAS #4	J5	LED15	LED5
SAS #5	J6	LED16	LED6
SAS #6/NVMe #0*	J7	LED17	D42**
SAS #7/NVMe #1*	J8	LED18	D47**

*Hybrid ports; NVMe or SAS

**The failure LED is bi-color:

Solid red: Failure.

1Hz blinking red: Rebuild.

4Hz blinking red: Drive identification.

Green: NVMe SSD ready to remove.

Blinking amber (green and red): NVMe drive is not ready to be removed.

Notes

Disclaimer (cont.)

The products sold by Supermicro are not intended for and will not be used in life support systems, medical equipment, nuclear facilities or systems, aircraft, aircraft devices, aircraft/emergency communication devices or other critical systems whose failure to perform be reasonably expected to result in significant injury or loss of life or catastrophic property damage. Accordingly, Supermicro disclaims any and all liability, and should buyer use or sell such products for use in such ultra-hazardous applications, it does so entirely at its own risk. Furthermore, buyer agrees to fully indemnify, defend and hold Supermicro harmless for and against any and all claims, demands, actions, litigation, and proceedings of any kind arising out of or related to such ultra-hazardous use or sale.