SCLA25 Chassis

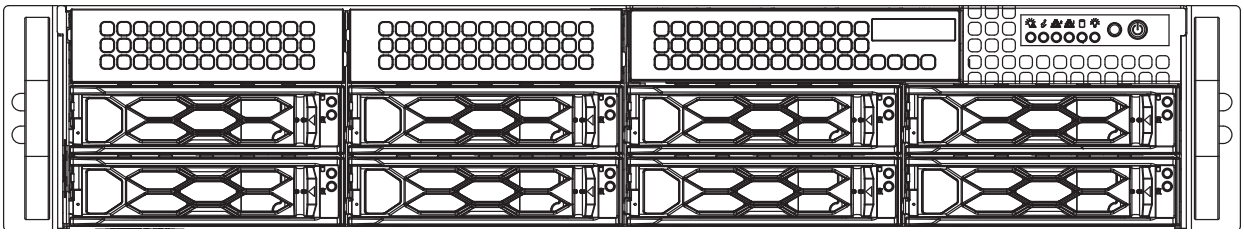

USER'S MANUAL

Revision 1.0

The information in this User's Manual has been carefully reviewed and is believed to be accurate. The vendor assumes no responsibility for any inaccuracies that may be contained in this document, and makes no commitment to update or to keep current the information in this manual, or to notify any person or organization of the updates. **Please Note: For the most up-to-date version of this manual, please see our website at www.supermicro.com.**

Super Micro Computer, Inc. ("Supermicro") reserves the right to make changes to the product described in this manual at any time and without notice. This product, including software and documentation, is the property of Supermicro and/or its licensors, and is supplied only under a license. Any use or reproduction of this product is not allowed, except as expressly permitted by the terms of said license.

IN NO EVENT WILL Super Micro Computer, Inc. BE LIABLE FOR DIRECT, INDIRECT, SPECIAL, INCIDENTAL, SPECULATIVE OR CONSEQUENTIAL DAMAGES ARISING FROM THE USE OR INABILITY TO USE THIS PRODUCT OR DOCUMENTATION, EVEN IF ADVISED OF THE POSSIBILITY OF SUCH DAMAGES. IN PARTICULAR, SUPER MICRO COMPUTER, INC. SHALL NOT HAVE LIABILITY FOR ANY HARDWARE, SOFTWARE, OR DATA STORED OR USED WITH THE PRODUCT, INCLUDING THE COSTS OF REPAIRING, REPLACING, INTEGRATING, INSTALLING OR RECOVERING SUCH HARDWARE, SOFTWARE, OR DATA.

Any disputes arising between manufacturer and customer shall be governed by the laws of Santa Clara County in the State of California, USA. The State of California, County of Santa Clara shall be the exclusive venue for the resolution of any such disputes. Supermicro's total liability for all claims will not exceed the price paid for the hardware product.

FCC Statement: This equipment has been tested and found to comply with the limits for a Class A digital device pursuant to Part 15 of the FCC Rules. These limits are designed to provide reasonable protection against harmful interference when the equipment is operated in an industrial environment. This equipment generates, uses, and can radiate radio frequency energy and, if not installed and used in accordance with the manufacturer's instruction manual, may cause harmful interference with radio communications. Operation of this equipment in a residential area is likely to cause harmful interference, in which case you will be required to correct the interference at your own expense.

California Best Management Practices Regulations for Perchlorate Materials: This Perchlorate warning applies only to products containing CR (Manganese Dioxide) Lithium coin cells. "Perchlorate Material-special handling may apply. See www.dtsc.ca.gov/hazardouswaste/perchlorate".

WARNING: This product can expose you to chemicals including lead, known to the State of California to cause cancer and birth defects or other reproductive harm. For more information, go to www.P65Warnings.ca.gov.

The products sold by Supermicro are not intended for and will not be used in life support systems, medical equipment, nuclear facilities or systems, aircraft, aircraft devices, aircraft/emergency communication devices or other critical systems whose failure to perform be reasonably expected to result in significant injury or loss of life or catastrophic property damage. Accordingly, Supermicro disclaims any and all liability, and should buyer use or sell such products for use in such ultra-hazardous applications, it does so entirely at its own risk. Furthermore, buyer agrees to fully indemnify, defend and hold Supermicro harmless for and against any and all claims, demands, actions, litigation, and proceedings of any kind arising out of or related to such ultra-hazardous use or sale.

Manual Revision 1.0 Release

Date: January 31, 2025 mk

Unless you request and receive written permission from Super Micro Computer, Inc., you may not copy any part of this document. Information in this document is subject to change without notice. Other products and companies referred to herein are trademarks or registered trademarks of their respective companies or mark holders.

Copyright © 2025 by Super Micro Computer, Inc.
All rights reserved.
Printed in the United States of America

Preface

About this Manual

This manual is written for professional system integrators and PC technicians. It provides information for the installation and use of the server. Installation and maintenance should be performed by experienced technicians only.

Please refer to the SCLA25 server specifications page on our website for updates on supported memory, processors and operating systems (http://www.supermicro.com).

Notes

For your system to work properly, please follow the links below to download all necessary drivers/utilities and the user's manual for your server.

- Supermicro product manuals: http://www.supermicro.com/support/manuals/
- Product drivers and utilities: https://www.supermicro.com/wftp
- Product safety info: http://www.supermicro.com/about/policies/safety_information.cfm

If you have any questions, please contact our support team at:
support@supermicro.com

This manual may be periodically updated without notice. Please check the Supermicro website for possible updates to the manual revision level.

Warnings

Special attention should be given to the following symbols used in this manual.

Warning! Indicates important information given to prevent equipment/property damage or personal injury.

Warning! Indicates high voltage may be encountered when performing a procedure.

Contents

Chapter 1 Introduction

1.1 Overview....7

1.2 Unpacking the System....7

1.3 Chassis Features....8

Control Panel....8

Front Features....9

Rear Features....9

Chapter 2 Rack Installation

2.1 Preparing for Setup....10

Choosing a Setup Location....10

Rack Precautions....10

Server Precautions....11

Rack Mounting Considerations....11

Ambient Operating Temperature....11

Airflow....11

Mechanical Loading....11

Circuit Overloading....11

Reliable Ground....12

2.2 Installing the Rails....13

Identifying the Rails....13

Releasing the Inner Rail....14

Installing the Inner Rails....15

Installing the Outer Rails onto the Rack....16

2.3 Installing the Chassis into a Rack....17

Removing the Chassis from the Rack....18

Chapter 3 Maintenance and Component Installation

3.1 Removing Power....19

3.2 Accessing the System....20

3.3 Chassis Components....21

Storage Drives....21

Drive Carrier Indicators....21

Installing Drives....22

3.5" Drive 23
2.5" Drive 23
DVD Drive Installation (Optional) 24
Installing Expansion Cards.....25
System Fans 26
Power Supply 27
Appendix A BPN-SAS3-825TQ Backplane
A.1 ESD Safety Guidelines.....28
A.2 General Safety Guidelines 28
A.3 An Important Note to Users 28
A.4 Introduction to the BPN-SAS3-825TQ Backplane 29
A.5 Front Connectors and SAS Ports.....30
Front Connectors 30
SAS Ports.....30
A.6 Front Connector and Pin Definitions 31
A.7 Front Jumper Locations and Pin Definitions 33
Explanation of Jumpers.....33
SGPIO and I^2C Modes and Jumper Settings.....34
SAS Port Connections in I^2C and SGPIO Settings 35
A.8 Rear Connectors and LED Indicators 36
Appendix B Standardized Warning Statements for AC Systems

Contacting Supermicro

Headquarters

Address:	Super Micro Computer, Inc. 980 Rock Ave. San Jose, CA 95131 U.S.A.
Tel:	+1 (408) 503-8000
Fax:	+1 (408) 503-8008
Email:	marketing@supermicro.com (General Information) support@supermicro.com (Technical Support)
Website:	www.supermicro.com

Europe

Address:	Super Micro Computer B.V. Het Sterrenbeeld 28, 5215 ML 's-Hertogenbosch, The Netherlands
Tel:	+31 (0) 73-6400390
Fax:	+31 (0) 73-6416525
Email:	sales@supermicro.nl (General Information) support@supermicro.nl (Technical Support) rma@supermicro.nl (Customer Support)
Website:	www.supermicro.nl

Asia-Pacific

Address:	Super Micro Computer, Inc. 3F, No. 150, Jian 1st Rd. Zhonghe Dist., New Taipei City 235 Taiwan (R.O.C)
Tel:	+886-(2) 8226-3990
Fax:	+886-(2) 8226-3992
Email:	support@supermicro.com.tw
Website:	www.supermicro.com.tw

Chapter 1

Introduction

1.1 Overview

The Supermicro SCLA25, is an all-purpose chassis. It will serve well in data centers, government labs, or business enterprises, for cloud and virtualization, simulation, automation, hosting and storage.

In addition to the motherboard and chassis, several included parts are listed below.

Main Parts List		
Description	**Part Number**	**Quantity**
Power supply modules	PWS-609P-1R2	2
Backplane	BPN-SAS3-825TQ	1
Fans	FAN-0181L4	3

Optional Parts List	
Description	**Part Number**
USB/COM port tray	MCP-220-00007-01
DVD dummy cover	MCP-290-00007-01
USB dummy tray support 1x 2.5" HDD	MCP-220-00023-01
Dual USB3.0/COM port tray for slim DVD bay	MCP-220-00114-0N
Dual USB3.0 tray for slim DVD bay	MCP-220-00152-0B
FAN power extension cable	CBL-0296L
Fixed 3.5" HDD tray	MCP-220-82502-0B
Rail	MCP-290-00053-0N
Short rail	MCP-290-00058-0N
Cable management arm	MCP-290-00073-0N
Cable arm adapter	MCP-120-82503-0N
Threaded rail adapter set for round-hole racks	MCP-290-00060-0N
Oval hole rail adapter set for round-threaded racks	MCP-290-00061-0N
Intel DP air shroud	MCP-310-29001-0N
Power cable	Please contact SMC for regional power cables

1.2 Unpacking the System

Inspect the box in which the server was shipped and note if it was damaged. If any equipment appears damaged, file a damage claim with the carrier who delivered it.

1.3 Chassis Features

Control Panel

The chassis front features a control panel to monitor node function and control power.

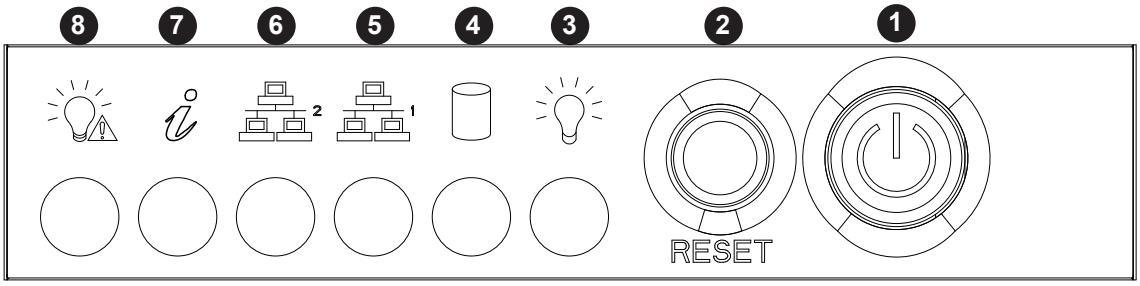

Figure 1-1. Control Panel

Control Panel Features		
Item	**Features**	**Description**
1	Power button	The main power switch applies or removes primary power from the power supply to the server but maintains standby power. To perform most maintenance tasks, unplug the system to remove all power..
2	Reset button	Reboots the system.
3	Power LED	Indicates power is being supplied to the system power supply units. This LED is illuminated when the system is operating normally.
4	HDD LED	Indicates hard disk drive activity.
5	NIC LED	Indicates network activity on LAN1 when flashing.
6	NIC LED	Indicates network activity on LAN2 when flashing.
7	Information LED	Alerts operator to several states, as noted in the table below.
8	Power Fail LED	Indicates a power supply module has failed.

Information LED	
Status	**Description**
Continuously on and red	An overheat condition has occurred. (This may be caused by cable congestion.)
Blinking red (1Hz)	Fan failure, check for an inoperative fan.
Blinking red (0.25Hz)	Power failure, check for a non-operational power supply.
Solid blue	UID has been activated locally to locate the server in a rack environment.
Blinking blue	UID has been activated using IPMI to locate the server in a rack environment.

Front Features

The front of the chassis includes eight hot-swap drive bays and the chassis control panel.

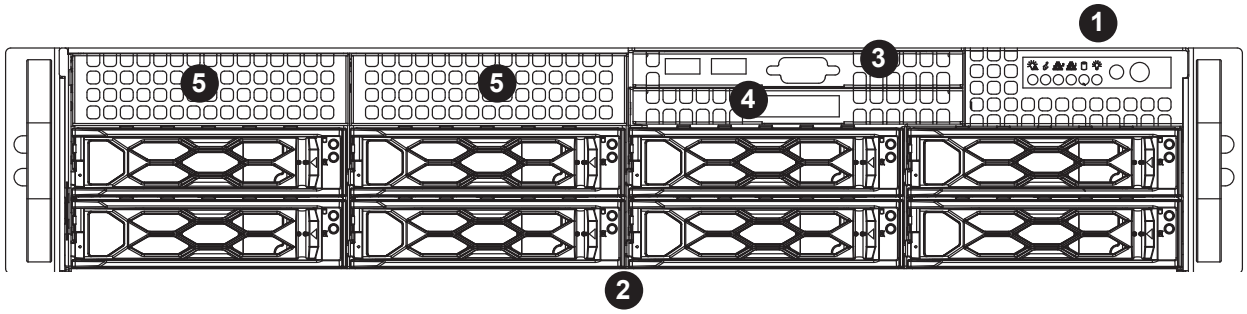

Figure 1-2. Chassis Front View

Front Chassis Features		
Item	**Feature**	**Description**
1	Control Panel	Described in previous section
2	Drives	Eight 3.5" hot-swap storage drive bays
3	I/O panel (optional)	Two USB ports and one COM port
4	DVD drive bay (optional DVD drive)	Bay for an optional slim DVD drive
5	Bays for optional drive (optional)	Two bays for fixed internal drives (with optional SAS RAID controller)

Rear Features

The illustration below shows the features on the rear of the chassis.

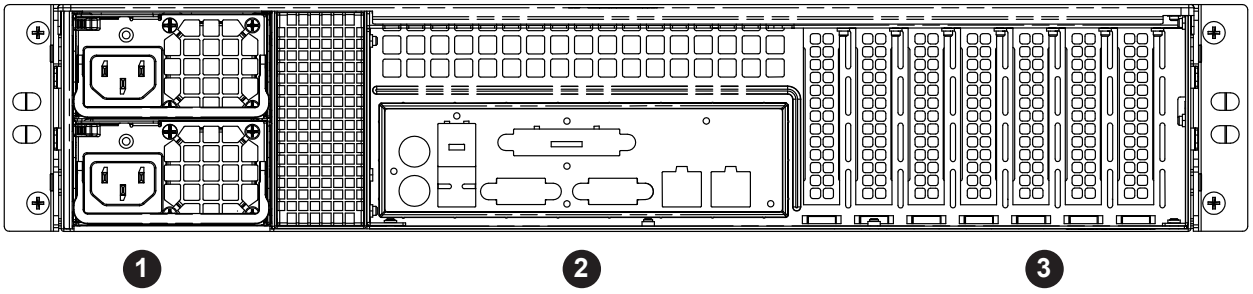

Figure 1-3. Chassis Rear View

Rear Chassis Features		
Item	**Feature**	**Description**
1	Power Supplies	Redundant power supply modules
2	I/O Panel	Input/Output ports
3	PCI Slots	Seven usable slots for expansion cards

Chapter 2

Rack Installation

This chapter provides advice and instructions for **optionally** mounting your system in a rack. Please contact your sales representative to order optional mounting rails for your chassis.

2.1 Preparing for Setup

The box in which the system was shipped should include the hardware needed to install it into the rack. Please read this section in its entirety before you begin the installation.

Choosing a Setup Location

- The system should be situated in a clean, dust-free area that is well ventilated. Avoid areas where heat, electrical noise and electromagnetic fields are generated.
- Leave enough clearance in front of the rack so that you can open the front door completely (~25 inches) and approximately 30 inches of clearance in the back of the rack to allow sufficient space for airflow and access when servicing.
- This product should be installed only in a Restricted Access Location (dedicated equipment rooms, service closets, etc.).
- This product is not suitable for use with visual display workplace devices according to §2 of the German Ordinance for Work with Visual Display Units.

Rack Precautions

- Ensure that the leveling jacks on the bottom of the rack are extended to the floor so that the full weight of the rack rests on them.
- In single rack installations, stabilizers should be attached to the rack. In multiple rack installations, the racks should be coupled together.
- Always make sure the rack is stable before extending a server or other component from the rack.
- Extend only one server or component at a time - extending two or more simultaneously may cause the rack to become unstable.

Server Precautions

- Review the electrical and general safety precautions in the appendix, "Standardized Safety Warnings" in this manual.
- Determine the placement of each component in the rack *before* you install the rails.
- Install the heaviest server components at the bottom of the rack first and then work your way up.
- Use a regulating uninterruptible power supply (UPS) to protect the server from power surges and voltage spikes and to keep your system operating in case of a power failure.
- Allow any drives and power supply modules to cool before touching them.
- When not servicing, always keep the front door of the rack and all covers/panels on the servers closed to maintain proper cooling.

Rack Mounting Considerations

Ambient Operating Temperature

If installed in a closed or multi-unit rack assembly, the ambient operating temperature of the rack environment may be greater than the room's ambient temperature. Therefore, consideration should be given to installing the equipment in an environment compatible with the manufacturer’s maximum rated ambient temperature (Tmra).

Airflow

Equipment should be mounted into a rack so that the amount of airflow required for safe operation is not compromised.

Mechanical Loading

Equipment should be mounted into a rack so that a hazardous condition does not arise due to uneven mechanical loading.

Circuit Overloading

Consideration should be given to the connection of the equipment to the power supply circuitry and the effect that any possible overloading of circuits might have on overcurrent protection and power supply wiring. Appropriate consideration of equipment nameplate ratings should be used when addressing this concern.

Reliable Ground

A reliable ground must be maintained at all times. To ensure this, the rack itself should be grounded. Particular attention should be given to power supply connections other than the direct connections to the branch circuit (i.e. the use of power strips, etc.).

To prevent bodily injury when mounting or servicing this unit in a rack, you must take special precautions to ensure that the system remains stable. The following guidelines are provided to ensure your safety:

- This unit should be mounted at the bottom of the rack if it is the only unit in the rack.
- When mounting this unit in a partially filled rack, load the rack from the bottom to the top with the heaviest component at the bottom of the rack.
- If the rack is provided with stabilizing devices, install the stabilizers before mounting or servicing the unit in the rack.
- Slide rail mounted equipment is not to be used as a shelf or a work space.

2.2 Installing the Rails

This section provides information on installing the chassis into a rack unit with the rails provided. There are a variety of rack units on the market, which may mean that the assembly procedure will differ slightly from the instructions provided. You should also refer to the installation instructions that came with the rack unit you are using. **Note:** This rail will fit a rack between 26.8" and 36.4" deep.

Identifying the Rails

The chassis package includes two rail assemblies. Each assembly consists of three sections: An inner rail that secures directly to the chassis, an outer rail that secures to the rack, and a middle rail which extends from the outer rail. These assemblies are specifically designed for the left and right side of the chassis and labeled.

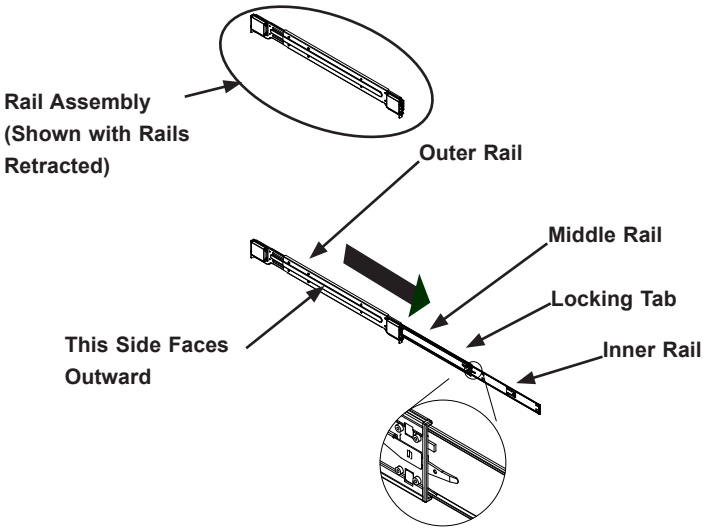

Figure 2-1. Identifying the Outer Rail, Middle Rail and Inner Rail
(Left Rail Assembly Shown)

Note: Both front chassis rails and the rack rails have a locking tab, which serves two functions. First, it locks the server into place when installed and pushed fully into the rack (its normal operating position. In addition, these tabs lock the server in place when fully extended from the rack. This prevents the server from coming completely out of the rack when pulled out for servicing.

Releasing the Inner Rail

Each inner rail has a locking latch. This latch prevents the server from coming completely out of the rack when when the chassis is pulled out for servicing.

To mount the rail onto the chassis, first release the inner rail from the outer rails.

1. Pull the inner rail out of the outer rail until it is fully extended as illustrated below.
2. Press the locking tab down to release the inner rail.
3. Pull the inner rail all the way out.

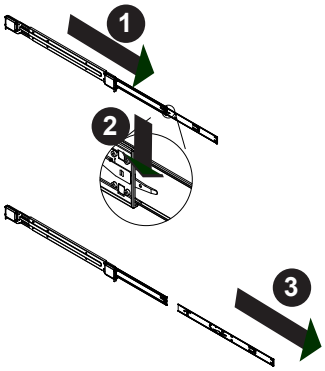

Figure 2-2. Extending and Releasing the Inner Rail

Installing the Inner Rails

Begin the rack mounting procedure by installing the inner rails to the chassis.

1. Identify the left and right inner rails. They are labeled.
2. Place the inner rail firmly against the side of the chassis, aligning the hooks on the side of the chassis with the holes in the inner rail.
3. Slide the inner rail forward toward the front of the chassis and under the hooks until the quick release bracket snaps into place, securing the rail to the chassis.
4. Optionally, you can further secure the inner rail to the chassis with a screw.

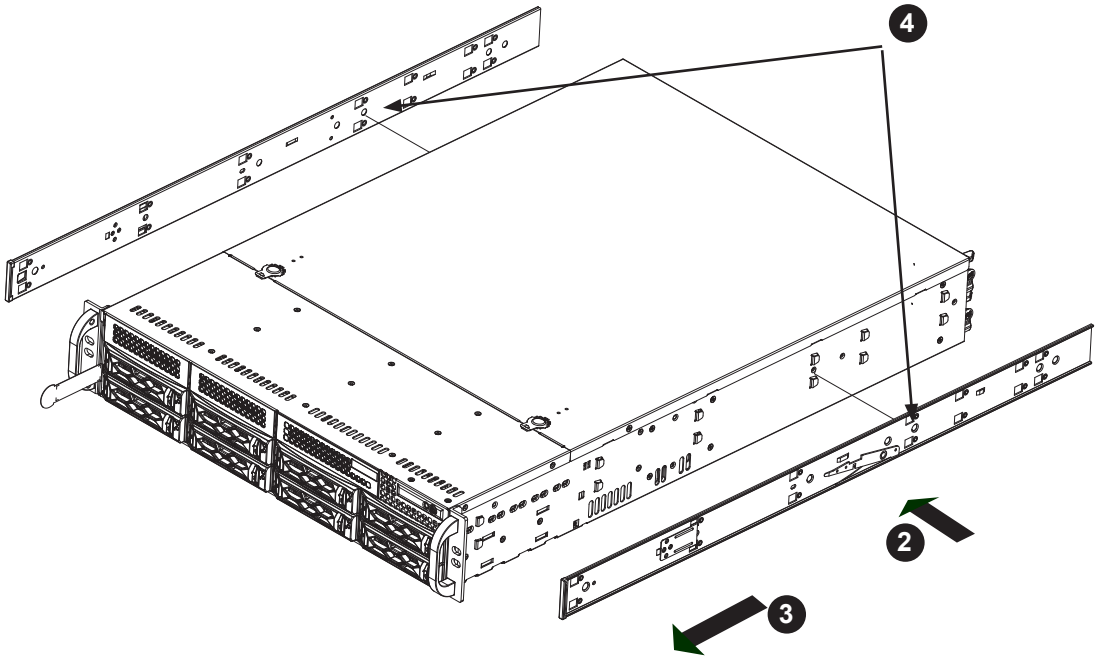

Figure 2-3. Installing the Rails

Warning: Do not pick up the server with the front handles. They are designed to pull the system from a rack only.

Installing the Outer Rails onto the Rack

1. Press upward on the locking tab at the rear end of the middle rail.
2. Push the middle rail back into the outer rail.
3. Hang the hooks on the front of the outer rail onto the square holes on the front of the rack. If desired, use screws to secure the outer rails to the rack.
4. Pull out the rear of the outer rail, adjusting the length until it just fits within the posts of the rack.
5. Hang the hooks of the rear section of the outer rail onto the square holes on the rear of the rack. Take care that the proper holes are used so the rails are level. If desired, use screws to secure the rear of the outer rail to the rear of the rack.

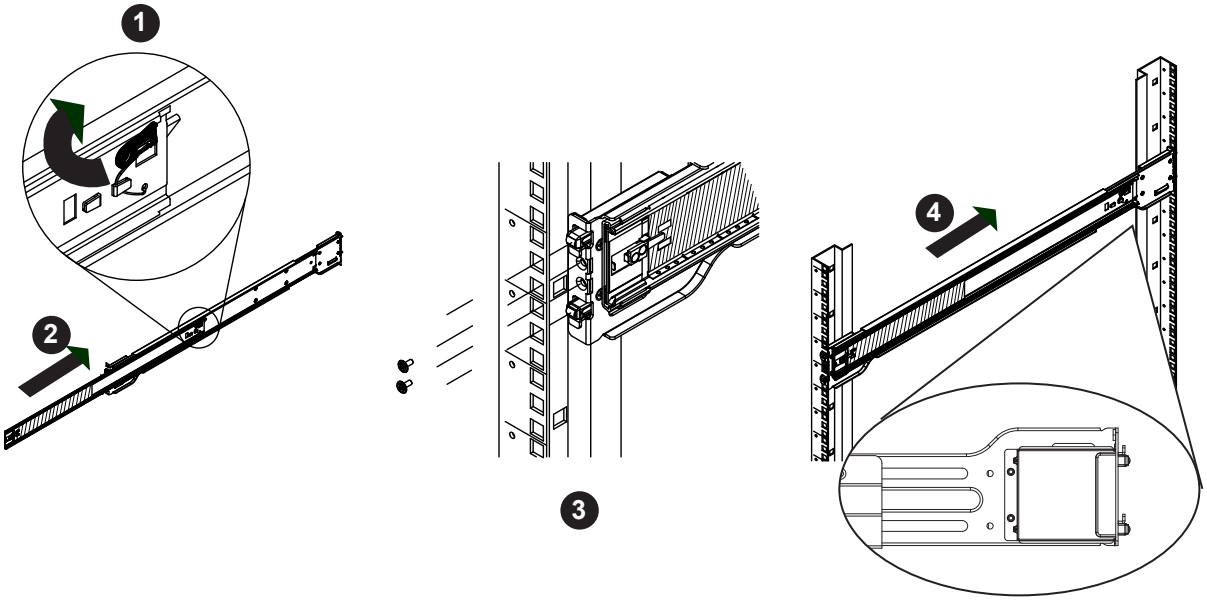

Figure 2-4. Extending and Mounting the Outer Rails

2.3 Installing the Chassis into a Rack

Once rails are attached to the chassis and the rack, you can install the server.

1. Pull the middle rail out of the front of the outer rail and make sure that the ball bearing shuttle is locked at the front of the middle rail.
2. Align the rear of the chassis rails with the middle rails and then push evenly on both sides of the chassis until it clicks into the fully extended position.
3. Depress the locking tabs on both sides of the chassis and push the it fully into the rack. The locking tabs should "click".
4. Optional screws may be used to hold the front of the chassis to the rack.

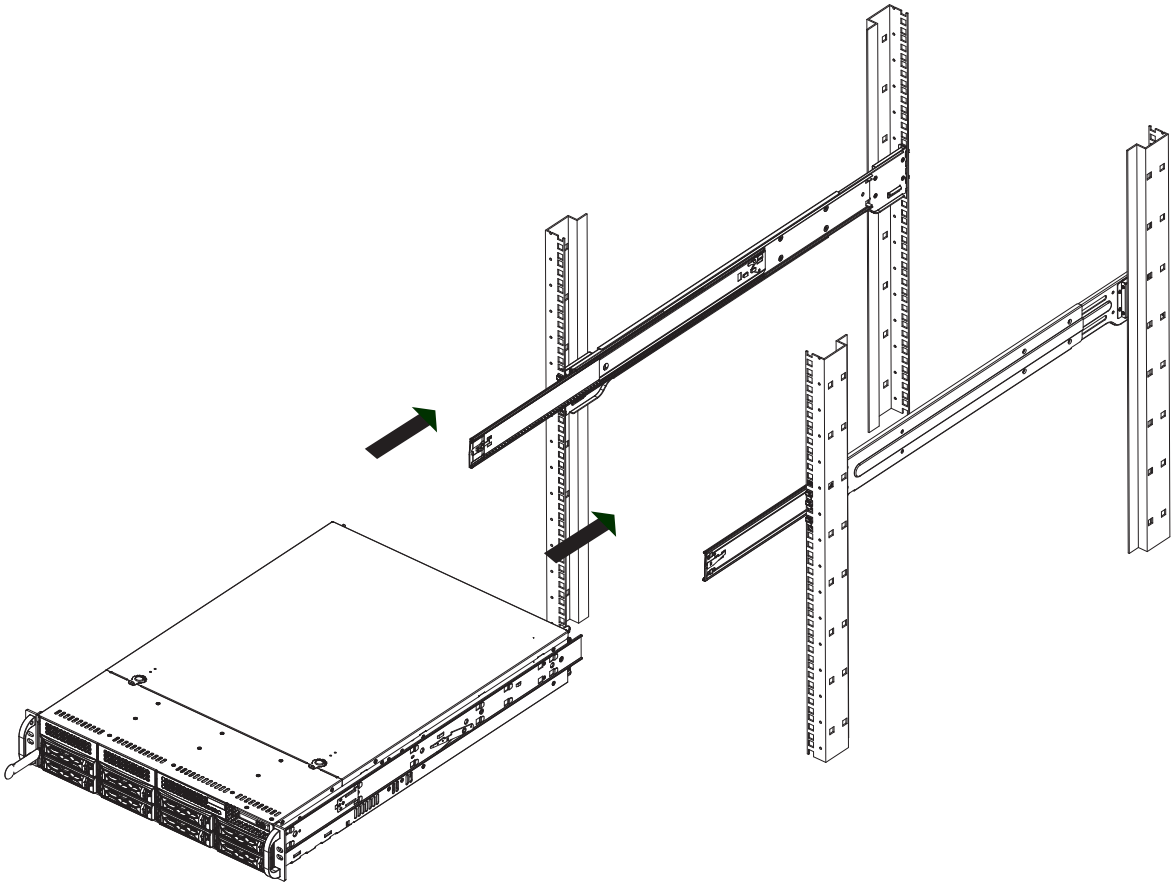

Figure 2-5. Installing the Server into the Rack

Note: Keep the ball bearing shuttle locked at the front of the middle rail during installation.

Note: Figure is for illustrative purposes only. Always install servers to the bottom of a rack first.

Removing the Chassis from the Rack

Caution! It is dangerous for a single person to off-load the heavy chassis from the rack without assistance. Be sure to have sufficient assistance supporting the chassis when removing it from the rack. Use a lift.

1. Pull the chassis forward out the front of the rack until it stops.
2. Press the release latches on each of the inner rails downward simultaneously and contiue to pull the chassis forward and out of the rack.

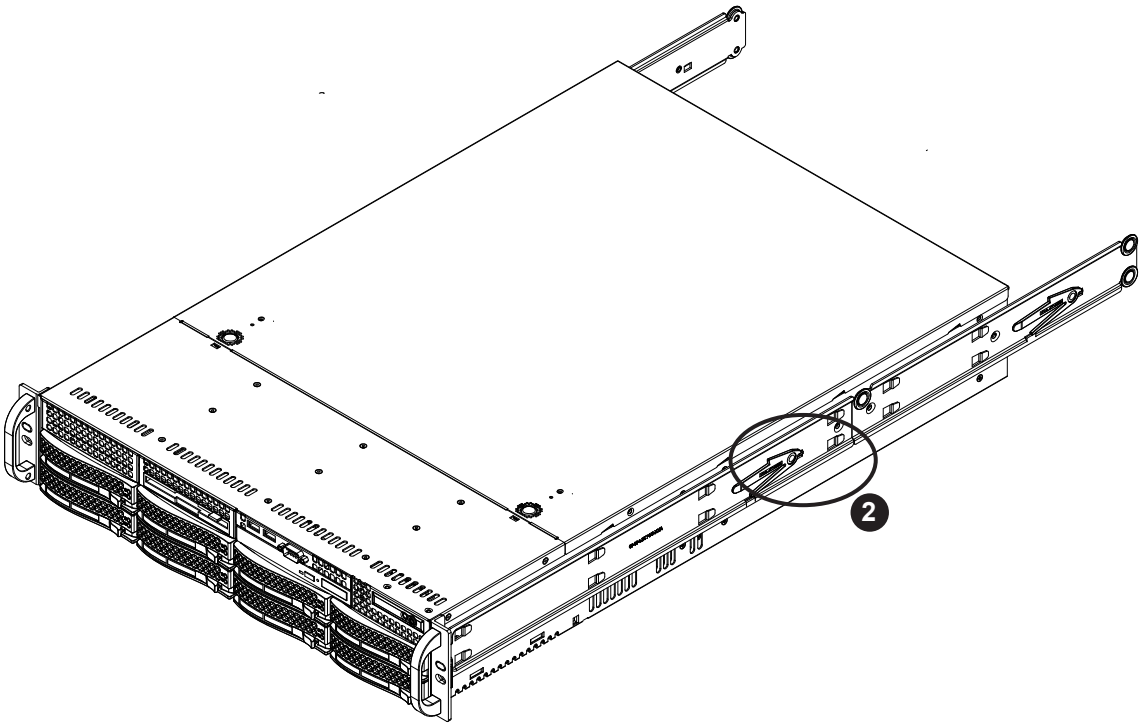

Figure 2-6. Removing the Chassis From the Rack

Chapter 3

Maintenance and Component Installation

This chapter provides instructions on installing and replacing main system components. To prevent compatibility issues, only use components that match the specifications and/or part numbers given.

Installation or replacement of most components require that power first be removed from the system. Please follow the procedures given in each section.

3.1 Removing Power

Use the following procedure to ensure that power has been removed from the system. This step is necessary when removing or installing non-hot-swap components or when replacing a non-redundant power supply.

1. Use the operating system to power down the system.
2. After the system has completely shut-down, disconnect the AC power cords from the power strip or outlet.
3. Disconnect the power cords from the power supply modules.

3.2 Accessing the System

A portion of the chassis top is removable to allow access to components.

Removing the Top Cover

1. Remove the screw on each side of the chassis.
2. Depress the release buttons and slide the cover back and off.

Caution: Except for short periods of time, do not operate the server without the cover in place. The chassis cover must be in place to allow for proper airflow and to prevent overheating.

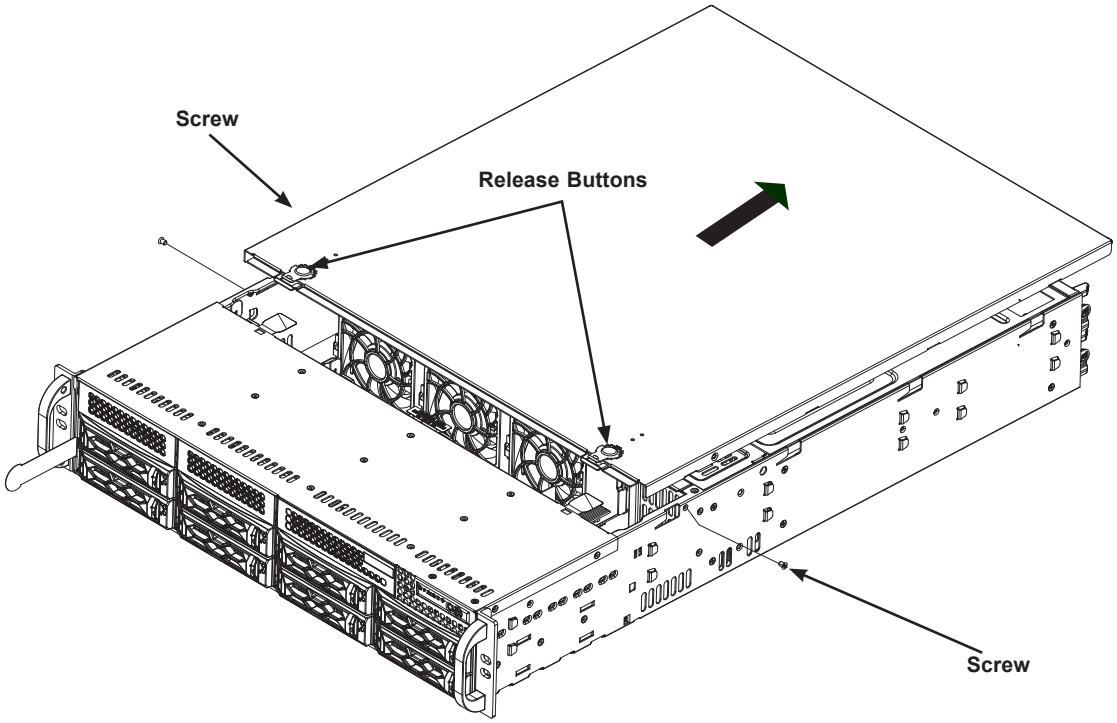

Figure 3-1. Removing the Chassis Cover

3.3 Chassis Components

Storage Drives

The SCLA25 chassis supports eight hot-swap 3.5" and two rear 2.5" SATA3 storage drives (HDDs or SSDs) in drive carriers to simplify their removal from the chassis. These carriers also help promote proper airflow.

For VROC configurations, refer to the VROC appendix in this manual.

Note: Enterprise level hard disk drives are recommended for use in Supermicro chassis and servers. For information on recommended HDDs, visit the Supermicro website at http://www.supermicro.com/products/nfo/files/storage/SBB-HDDCompList.pdf.

The server also supports PCIe M.2 storage that can be installed directly on the motherboard. See Section 3.3.

Drive Carrier Indicators

Each drive carrier has two LED indicators: an activity indicator and a status indicator. For RAID configurations using a controller, the meaning of the status indicator is described in the table below. For OS RAID or non-RAID configurations, some LED indications are not supported, such as hot spare.

Drive Carrier LED Indicators			
	Color	**Blinking Pattern**	**Behavior for Device**
Activity LED	Green	Solid On	SAS drive installed
	Green	Blinking	I/O activity
Status LED	Red	Solid On	Failure of drive with RSTe support
	Red	Blinking at 1 Hz	Rebuild drive with RSTe support
	Red	Blinking with two blinks and one stop at 1 Hz	Hot spare for drive with RSTe support *(not supported in VMD mode)*
	Red	On for five seconds, then off	Power on for drive with RSTe support
	Red	Blinking at 4 Hz	Identify drive with RSTe support

Installing Drives

Removing Drive Carriers from the Chassis

1. Press the release button on the drive carrier. This extends the drive carrier handle.
2. Use the handle to pull the carrier out of the chassis.
3. Remove the dummy drive from the carrier.

Caution: Except for short periods of time (swapping drives), do not operate the server with the drive carriers removed from the bays, regardless of how many drives are installed, for proper airflow.

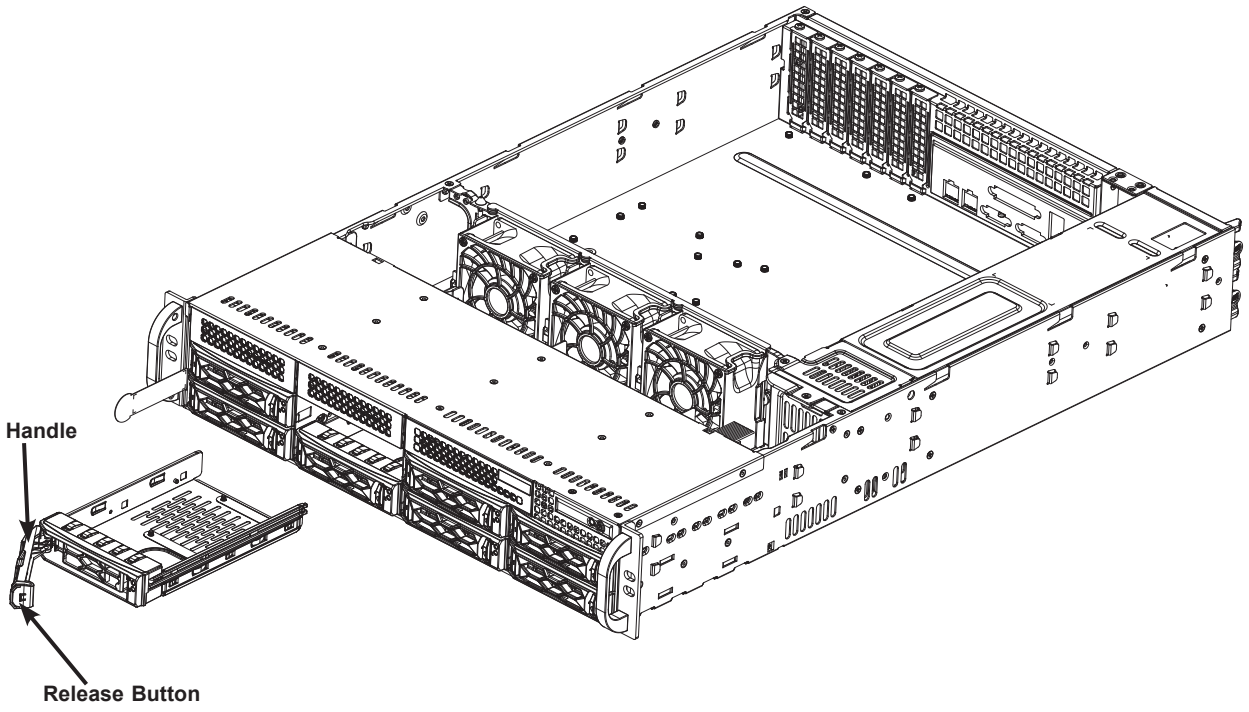

Figure 3-2. Removing a Drive Carrier

Installing a 3.5" or 2.5" Hard Drive

1. Place the hard drive carrier on a flat surface.
2. Insert a 3.5" hard drive in an angle into the carrier, so that the mounting holes on the right side of the drive align with the two stubs in the drive carrier. Insert this side into the drive carrier first, then push the other side into the drive carrier completely.
3. Secure the hard drive to the carrier with a screw, included with the hard drive.
4. For 2.5" hard drives, there aren't stubs that will reach to hold the right side of the drive. Instead, install the drive directly into the bottom of the tray and secure with four screws underneath.
5. Use the open handle of the drive carrier to insert the drive carrier into the open drive bay. Secure the drive carrier into the drive bay by closing the drive carrier handle

3.5" Drive

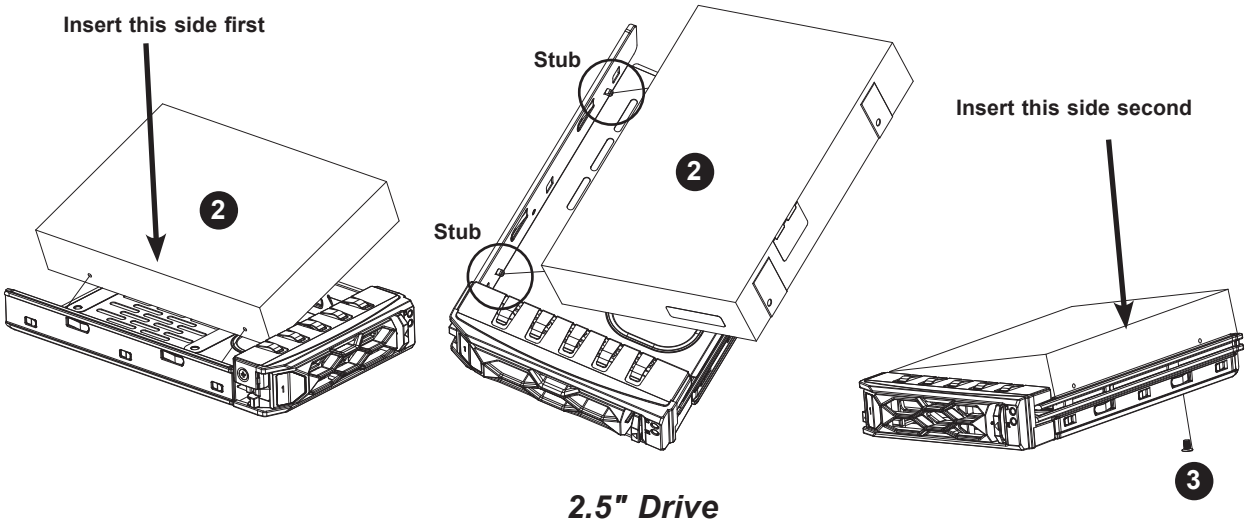

2.5" Drive

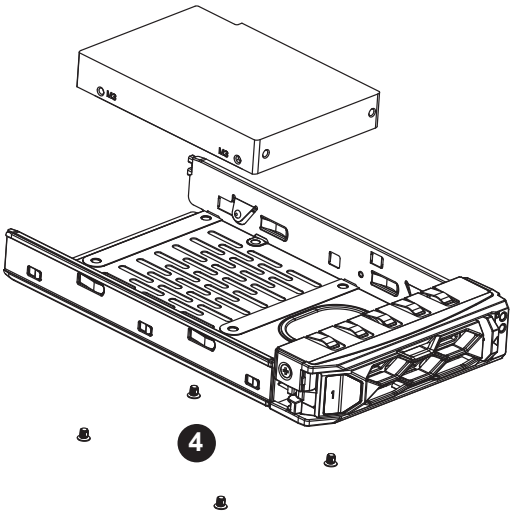

Figure 3-3. Installing a 2.5" or 3.5" Hard Drive

DVD Drive Installation *(Optional)*

The system accommodates an optional slim DVD drive. Side mounting brackets are typically required.

Installing a DVD Drive

1. Power down the system as described in Section 3.1 and remove the chassis cover.
2. Remove the mini-bezel (grate) from the drive bay The bezel can be removed by pulling out the hard drive beneath the DVD drive bay, then pulling the mini-bezel forward.
3. Insert the new drive unit in the slot until the tab locks in place.
4. Connect the data and power cables.
5. Replace the chassis cover and power up the system.

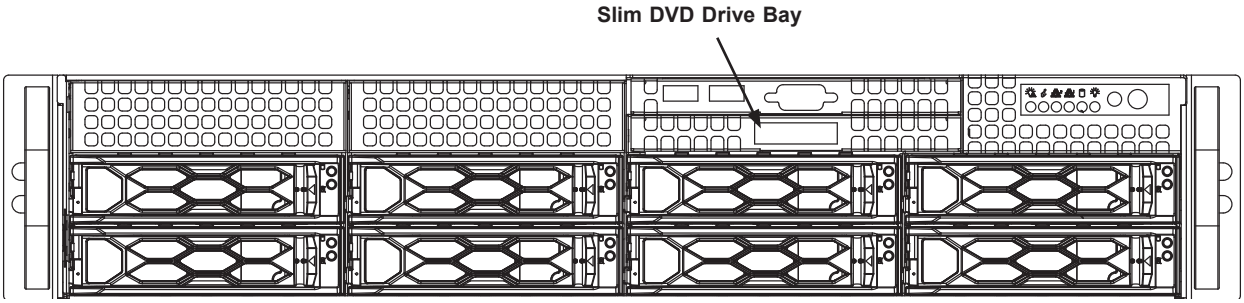

Figure 3-4. DVD Drive Bay

To remove the DVD drive, unplug the power and data cables. Locate the locking tab at the rear (left hand side when viewed from the front) of the DVD drive. Push the tab toward the drive and push the drive unit out the front of the chassis.

Installing Expansion Cards

The system can accommodate six low-profile PCI-E cards. The chassis has seven: the slot nearest the chassis center is not supported by this motherboard.

Installing an Expansion Card

1. Power down the system and remove the cover.
2. In the rear of the chassis, remove the blank PCI shield that covers the chassis slot.
3. Slide the expansion card into the expansion slot on the motherboard while aligning it with the chassis slot in the rear of the chassis.
4. Secure the expansion card shield onto the rear of the chassis with a screw.

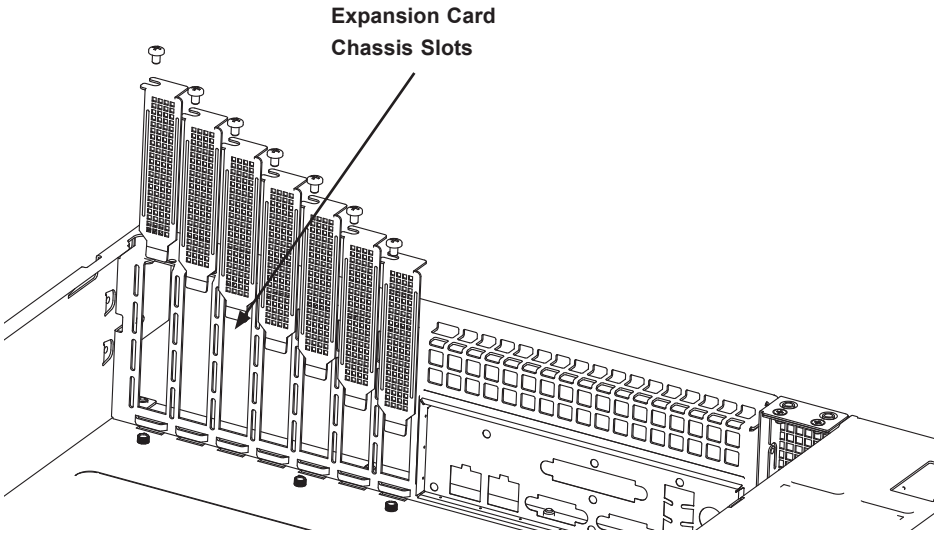

Figure 3-5. Removing a Blank PCI Shield

System Fans

Three hot-swap fans provide cooling. They can be replaced without powering down the system.

Fan speed is controlled by a system temperature setting in IPMI. If a fan fails, the remaining fans will ramp up to full speed. The system can continue to run with a failed fan. Replace any failed fan at your earliest convenience with the same type and model.

Changing a System Fan

1. Determine which fan is failing. If possible, use IPMI. If not, remove the chassis cover while the power is on, and examine the fans to determine which one has failed.
2. Remove the failed fan's power cable from the backplane.
3. Lift the fan housing up and out of the chassis.
4. Push the fan up from the bottom and out of the top of the housing.
5. Place the replacement fan into the vacant space in the housing while making sure the arrows on the top of the fan (indicating air direction) point in the same direction as the arrows on the other fans.
6. Put the fan housing back into the chassis and reconnect the cable.
7. Replace the drawer and confirm that the fan is working properly before replacing the chassis cover.

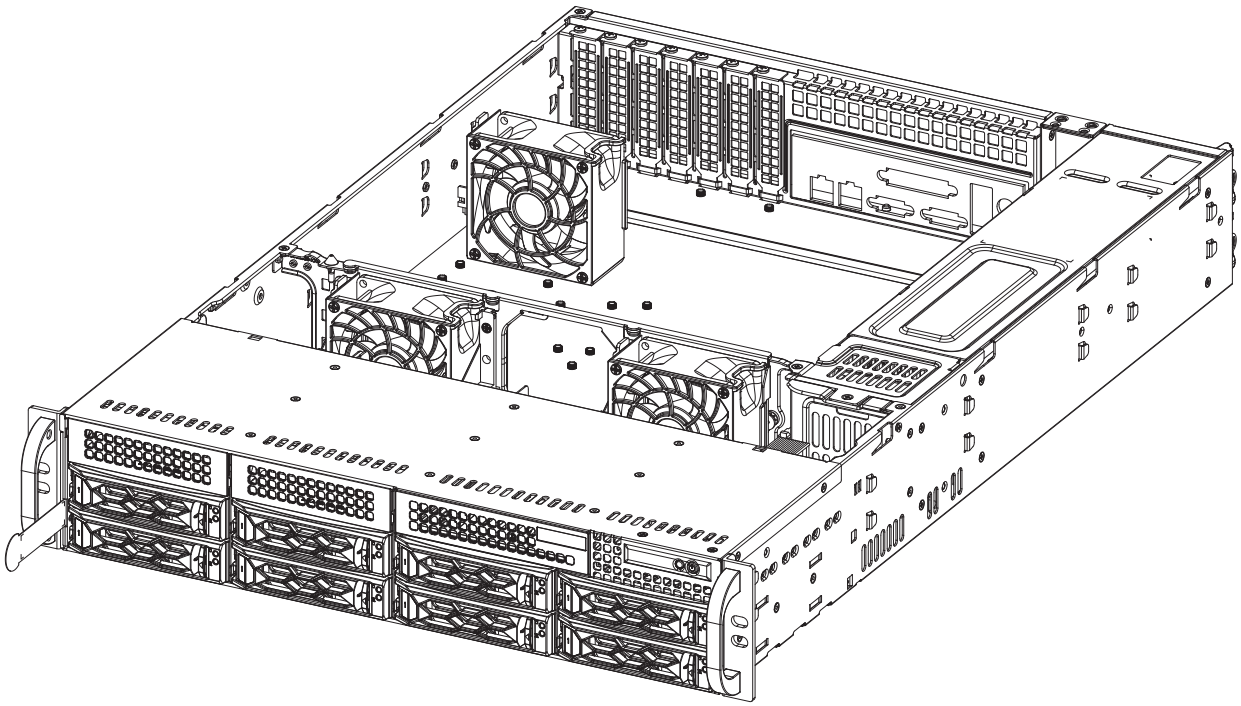

Figure 3-6. System Fan Placement

Power Supply

The chassis features redundant power supplies. The power modules can be changed without powering down the system. New units can be ordered directly from Supermicro or authorized distributors.

These power supplies are auto-switching capable. This feature enables them to automatically sense the input voltage and operate at a 100-120v or 180-240v. An amber light will be illuminated on the power supply when the power is off. An illuminated green light indicates that the power supply is operating.

Replacing the Power Supply

1. Unplug the AC cord from the module to be replaced.
2. Push the release tab on the back of the power supply as illustrated.

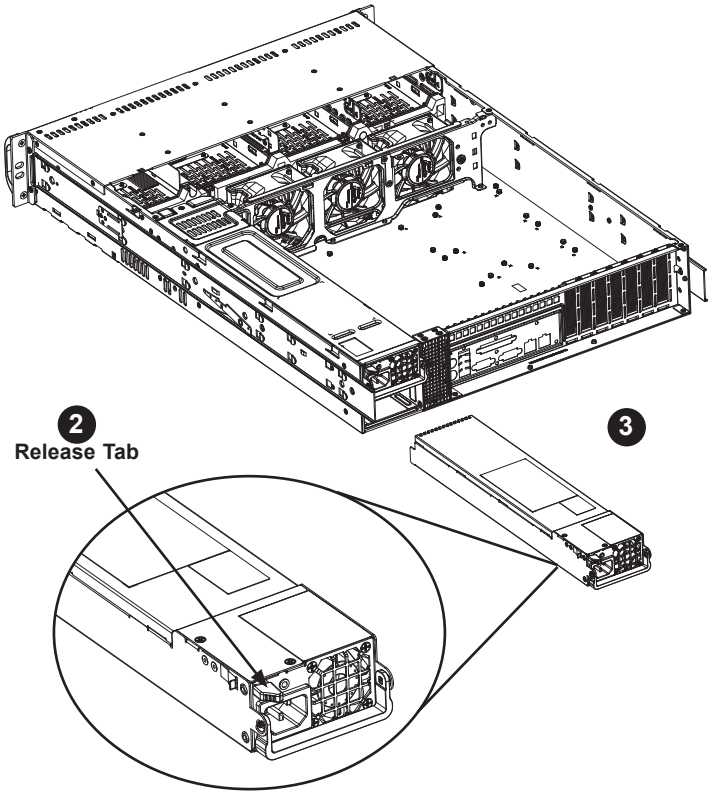

Figure 3-7. Power Supply Release Tab

3. Pull the power supply out using the handle.
4. Replace the failed power module with the same model.
5. Push the new power supply module into the power bay until it clicks.
6. Plug the AC power cord back into the module.

Appendix A

BPN-SAS3-825TQ Backplane

To avoid personal injury and property damage, carefully follow all the safety steps listed below when accessing your system or handling the components.

A.1 ESD Safety Guidelines

Electrostatic Discharge (ESD) can damage electronic components. To prevent damage to your system, it is important to handle it very carefully. The following measures are generally sufficient to protect your equipment from ESD.

- Use a grounded wrist strap designed to prevent static discharge.
- Touch a grounded metal object before removing a component from the antistatic bag.
- Handle the backplane by its edges only; do not touch its components, peripheral chips, memory modules or gold contacts.
- When handling chips or modules, avoid touching their pins.
- Put the card and peripherals back into their antistatic bags when not in use.

A.2 General Safety Guidelines

- Always disconnect power cables before installing or removing any components from the computer, including the BPN-SAS3-825TQ backplane.
- Disconnect the power cable before installing or removing any cables from the BPN-SAS3-825TQ backplane.
- Make sure that the BPN-SAS3-825TQ backplane is securely and properly installed on the motherboard to prevent damage to the system due to power shortage.

A.3 An Important Note to Users

All images and layouts shown in this user's guide are based upon the latest PCB Revision available at the time of publishing. The card you have received may or may not look exactly the same as the graphics shown in this manual.

A.4 Introduction to the BPN-SAS3-825TQ Backplane

The BPN-SAS3-825TQ backplane has been designed to utilize the most up-to-date technology available, providing your system with reliable, high-quality performance.

This manual reflects BPN-SAS3-825TQ Revision 1.0, the most current release available at the time of publication. Always refer to the Supermicro Web site at www.supermicro.com for the latest updates, compatible parts and supported configurations.

A.5 Front Connectors and SAS Ports

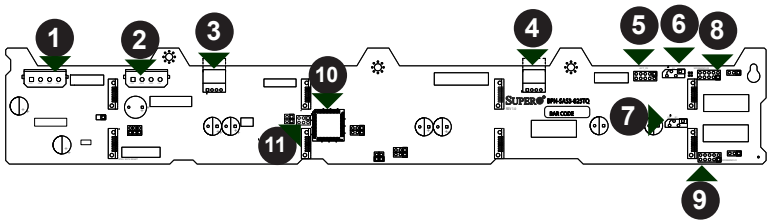

Figure A-1. Front Connectors

Front Connectors

1. 4-pin power connector: JP13
2. 4-pin power connector: JP10
3. Power connector to CD-ROM/ slim FDD: JP18
4. Power connector to CD-ROM/ slim FDD: JP17
5. SAS activity LED header: JP26
6. I^2C connector #2: JP45
7. I^2C connector #1: JP44
8. Sideband connector #2: JP52
9. Sideband connector #1: JP51
10. MG9072 chip
11. Upgrade header: JP46

SAS Ports

12. SAS Port #0
13. SAS Port #1
14. SAS Port #2
15. SAS Port #3
16. SAS Port #4
17. SAS Port #5
18. SAS Port #6
19. SAS Port #7

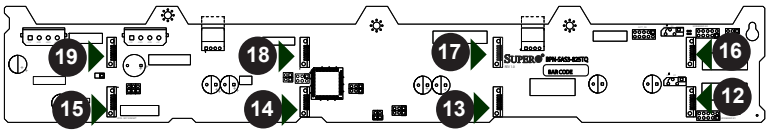

Figure A-2. Front SAS Ports

A.6 Front Connector and Pin Definitions

#1 and #2 Backplane Main Power Connectors

The 4-pin connectors, designated JP10, and JP13 provide power to the backplane. See the table on the right for pin definitions.

Backplane Main Power 4-Pin Connector	
Pin#	Definition
1	+12V
2 and 3	Ground
4	+5V

#3 and #4 CD-ROM/Floppy Pin Connectors

Pin connectors designated J17 and J18, provide power to the CD-ROM and floppy drives. See the table on the right for pin definitions.

CD-ROM/FDD Power 4-Pin Connector	
Pin#	Definition
1	+5V
2 and 3	Ground
4	+12V

#5 Activity LED Headers

The activity LED header, designated JP26 is used to indicate the activity status of each SAS drive. The activity LED header is located on the front panel. For the activity lead header to work properly, connect to it using a 10-pin LED cable. This is only used when the activity LED is not supported by the hard drive.

SAS Activity LED Header Pin Definitions			
Pin #	Definition	Pin #	Definition
1	ACT IN#0	6	ACT IN#4
2	ACT IN#1	7	ACT IN#5
3	ACT IN#2	8	ACT IN#6
4	ACT IN#3	9	ACT IN#7
5	Ground	10	Empty

#6 and #7 I^2C Connectors

The I^2C Connectors, designated JP44 and JP45, are used to monitor the HDD activity and status. See the table on the right for pin definitions.

I^2C Connector Pin Definitions	
Pin#	Definition
1	Data
2	Ground
3	Clock
4	No Connection

#8 and #9 Sideband Headers

The sideband headers are designated JP51 and JP52. For SES-2 to work properly, you must connect an 8-pin sideband cable. See the table to the right for pin definitions.

Sideband Headers			
Pin #	Definition	Pin #	Definition
2	SGPIO: SDIN; I^2C: Backplane Addressing	1	Controller ID (SB6)
4	SGPIO: SD-OUT; I^2C: Reset	3	GND (SB2)
6	GND (SB3)	5	SGPIO: SLOAD; I^2C: SDA
8	Backplane ID (SB7)	7	SGPIO: SCLOCK; 1^2C: SCL
10	No Connection	9	No Connec-tion

#10 MG9072 Chip

The MG9072 is an enclosure management chip that supports the SES-2 controller and SES-2 protocols.

#11 Upgrade Header

The upgrade header is designated JP46 and is used for manufacturing purposes only.

#12 to #19 SAS Ports

The SAS ports are used to connect the SAS drive cables. The eight ports are designated #0 - #7. Each port is also compatible with SATA drives.

A.7 Front Jumper Locations and Pin Definitions

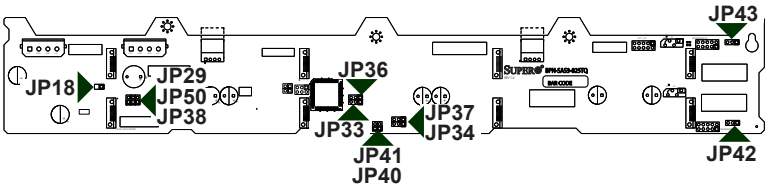

Figure A-3. Front Jumpers

Explanation of Jumpers

To modify the operation of the backplane, jumpers can be used to choose between optional settings. Jumpers create shorts between two pins to change the function of the connector. Pin 1 is identified with a square solder pad on the printed circuit board. Note: On two pin jumpers, "Closed" means the jumper is on and "Open" means the jumper is off the pins.

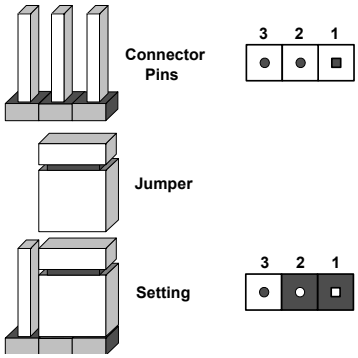

Jumper Settings		
Jumper	**Jumper Settings**	**Note**
JP29	Open (Jumper off the pins): Default Closed (Jumper on the pins): Reset	MG9072 chip reset
JP18	Open (Jumper off the pins): Default Closed (Jumper on the pins): Reset	Buzzer reset*

*The buzzer sound indicates that a condition requiring immediate attention as occurred.

The buzzer alarm is triggered by the following conditions:

1. Hard drive failure
2. System temperature over 45º Celsius.

SGPIO and I²C Modes and Jumper Settings

This backplane can utilize SGPIO or I²C, which is the default mode and can be used without making changes to your jumpers. The following information describes which jumper must be configured to use SGPIO mode.

SGPIO Settings (Default)		
Jumper	Jumper Setting	Notes
JP33	Pins 1-2	Controller ID #1
JP34	Pins 1-2	Backplane ID #1 1-2: ID#0
JP36	Pins 1-2	Controller ID #2
JP37	Pins 1-2	Backplane ID #2 1-2: ID#0
JP38	Open (Jumper off the pins)	I²C Reset #2
JP40	Closed (Jumper on the pins)	I²C Reset_SDOUT#1
JP41	Closed (Jumper on the pins)	I²C Reset_SDOUT#2
JP42	Pins 1-2	I²C Backplane ID_SDIN#1
JP43	Pins 1-2	I²C Backplane ID_SDIN#2
JP50	Open (Jumper off the pins)	I²C Reset #1

I²C Settings		
Jumper	Jumper Setting	Notes
JP33	Pins 2-3	Controller ID #1
JP34	Pins 1-2	Backplane ID #1 1-2: ID#0 2-3: ID#1
JP36	Pins 2-3	Controller ID #2
JP37	Pins 2-3	Backplane ID #2 1-2: ID#0 2-3: ID#1
JP38	Closed (Jumper on the pins)	I²C Reset #2
JP40	Open (Jumper off the pins)	I²C Reset_SDOUT#1
JP41	Open (Jumper off the pins)	I²C Reset_SDOUT#2
JP42	Pins 2-3	I²C Backplane ID_SDIN#1
JP43	Pins 2-3	I²C Backplane ID_SDIN#2
JP50	Closed (Jumper on the pins)	I²C Reset #1

SAS Port Connections in I²C and SGPIO Settings

Use the following chart when connecting this backplane. If the SAS ports are connected out of order, it will not be easy to identify drives using the LED function.

SAS Port Connections in I²C and SGPIO Settings		
Port #	**I²C**	**SGPIO**
# 0 - 3	I²C #1	Sideband #1
# 4 - 7	I²C #2	Sideband #2

A.8 Rear Connectors and LED Indicators

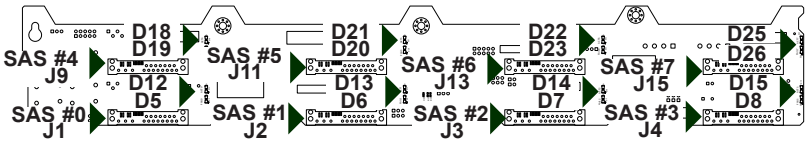

Figure A-4. Rear Connectors and LEDs

Rear SAS/SATA Connectors			
Rear Connector	**SAS Drive Number**	**Rear Connector**	**SAS Drive Number**
SAS #0 J1	SAS/SATA HDD #0	SAS #4 J9	SAS/SATA HDD #4
SAS #1 J2	SAS/SATA HDD #1	SAS #5 J11	SAS/SATA HDD #5
SAS #2 J3	SAS/SATA HDD #2	SAS #6 J13	SAS/SATA HDD #6
SAS #3 J4	SAS/SATA HDD #3	SAS #7 J15	SAS/SATA HDD #7

Rear LED Indicators		
Rear LED	**Hard Drive Activity**	**Failure LED**
SAS #0	D12	D5
SAS #1	D13	D6
SAS #2	D14	D7
SAS #3	D15	D8
SAS #4	D18	D19
SAS #5	D21	D20
SAS #6	D22	D23
SAS #7	D25	D26

Appendix B

Standardized Warning Statements for AC Systems

About Standardized Warning Statements

The following statements are industry standard warnings, provided to warn the user of situations which have the potential for bodily injury. Should you have questions or experience difficulty, contact Supermicro's Technical Support department for assistance. Only certified technicians should attempt to install or configure components.

Read this appendix in its entirety before installing or configuring components in the Supermicro chassis.

These warnings may also be found on our website at http://www.supermicro.com/about/policies/safety_information.cfm.

Warning Definition

Warning! This warning symbol means danger. You are in a situation that could cause bodily injury. Before you work on any equipment, be aware of the hazards involved with electrical circuitry and be familiar with standard practices for preventing accidents.

警告の定義

この警告サインは危険を意味します。

人身事故につながる可能性がありますので、いずれの機器でも動作させる前に、

電気回路に含まれる危険性に注意して、標準的な事故防止策に精通して下さい。

此警告符号代表危险。

您正处于可能受到严重伤害的工作环境中。在您使用设备开始工作之前，必须充分意识到触电的危险，并熟练掌握防止事故发生的标准工作程序。请根据每项警告结尾的声明号码找到此设备的安全性警告说明的翻译文本。

此警告符號代表危險。

您正處於可能身體可能會受損傷的工作環境中。在您使用任何設備之前，請注意觸電的危險，並且要熟悉預防事故發生的標準工作程序。請依照每一注意事項後的號碼找到相關的翻譯說明內容。

Warnung

WICHTIGE SICHERHEITSHINWEISE

Dieses Warnsymbol bedeutet Gefahr. Sie befinden sich in einer Situation, die zu Verletzungen führen kann. Machen Sie sich vor der Arbeit mit Geräten mit den Gefahren elektrischer Schaltungen und den üblichen Verfahren zur Vorbeugung vor Unfällen vertraut. Suchen Sie mit der am Ende jeder Warnung angegebenen Anweisungsnummer nach der jeweiligen Übersetzung in den übersetzten Sicherheitshinweisen, die zusammen mit diesem Gerät ausgeliefert wurden.

BEWAHREN SIE DIESE HINWEISE GUT AUF.

INSTRUCCIONES IMPORTANTES DE SEGURIDAD

Este símbolo de aviso indica peligro. Existe riesgo para su integridad física. Antes de manipular cualquier equipo, considere los riesgos de la corriente eléctrica y familiarícese con los procedimientos estándar de prevención de accidentes. Al final de cada advertencia encontrará el número que le ayudará a encontrar el texto traducido en el apartado de traducciones que acompaña a este dispositivo.

GUARDE ESTAS INSTRUCCIONES.

IMPORTANTES INFORMATIONS DE SÉCURITÉ

Ce symbole d'avertissement indique un danger. Vous vous trouvez dans une situation pouvant entraîner des blessures ou des dommages corporels. Avant de travailler sur un équipement, soyez conscient des dangers liés aux circuits électriques et familiarisez-vous avec les procédures couramment utilisées pour éviter les accidents. Pour prendre connaissance des traductions des avertissements figurant dans les consignes de sécurité traduites qui accompagnent cet appareil, référez-vous au numéro de l'instruction situé à la fin de chaque avertissement.

CONSERVEZ CES INFORMATIONS.

תקנון הצהרות אזהרה

הצהרות הבאות הן אזהרות על פי תקני התעשייה, על מנת להזהיר את המשתמש מפני חבלה פיזית אפשרית. במידה ויש שאלות או היתקלות בבעיה כלשהי, יש ליצור קשר עם מחלקת תמיכה טכנית של סופרמיקרו. טכנאים מוסמכים בלבד רשאים להתקין או להגדיר את הרכיבים.

יש לקרוא את הנספח במלואו לפני התקנת או הגדרת הרכיבים במארזי סופרמיקרו.

ا كً ف حالة وٌكي أى تتسبب ف اصابة جسد ةٌ هذا الزهز عٌ خطز !تحذ زٌ .
قبل أى تعول على أي هعذات،كي على علن بالوخاطز ال أٌجوة عي الذوائز
الكهزبائ ةٍ
وكي على درا ةٌ بالووارسات البقائ ةٍ لو عٌ وقع أي حادث
استخذم رقن الب إِى الو صٌص ف هًا ةٌ كل تحذ زٌ للعثر تزجوتها

안전을 위한 주의사항

경고!

이 경고 기호는 위험이 있음을 알려 줍니다. 작업자의 신체에 부상을 야기 할 수 있는 상태에 있게 됩니다. 모든 장비에 대한 작업을 수행하기 전에 전기회로와 관련된 위험요소들을 확인하시고 사전에 사고를 방지할 수 있도록 표준 작업절차를 준수해 주시기 바랍니다.

해당 번역문을 찾기 위해 각 경고의 마지막 부분에 제공된 경고문 번호를 참조하십시오

BELANGRIJKE VEILIGHEIDSINSTRUCTIES

Dit waarschuwings symbool betekent gevaar. U verkeert in een situatie die lichamelijk letsel kan veroorzaken. Voordat u aan enige apparatuur gaat werken, dient u zich bewust te zijn van de bij een elektrische installatie betrokken risico's en dient u op de hoogte te zijn van de standaard procedures om ongelukken te voorkomen. Gebruik de nummers aan het eind van elke waarschuwing om deze te herleiden naar de desbetreffende locatie.

BEWAAR DEZE INSTRUCTIES

Installation Instructions

Warning! Read the installation instructions before connecting the system to the power source.

設置手順書

システムを電源に接続する前に、設置手順書をお読み下さい。

警告

将此系统连接电源前,请先阅读安装说明。

警告

將系統與電源連接前，請先閱讀安裝說明。

Warnung

Vor dem Anschließen des Systems an die Stromquelle die Installationsanweisungen lesen.

¡Advertencia!

Lea las instrucciones de instalación antes de conectar el sistema a la red de alimentación.

Attention

Avant de brancher le système sur la source d'alimentation, consulter les directives d'installation.

יש לקרוא את הוראות התקנה לפני חיבור המערכת למקור מתח.

اقر إرشادات التركيب قبل توصيل النظام إلى مصدر للطاقة

시스템을 전원에 연결하기 전에 설치 안내를 읽어주십시오.

Waarschuwing

Raadpleeg de installatie-instructies voordat u het systeem op de voedingsbron aansluit.

Circuit Breaker

Warning! This product relies on the building's installation for short-circuit (overcurrent) protection. Ensure that the protective device is rated not greater than: 250 V, 20 A.

サーキット・ブレーカー

この製品は、短絡（過電流）保護装置がある建物での設置を前提としています。

保護装置の定格が250 V、20 Aを超えないことを確認下さい。

警告

此产品的短路(过载电流)保护由建筑物的供电系统提供,确保短路保护设备的额定电流不大于250V,20A。

警告

此產品的短路(過載電流)保護由建築物的供電系統提供,確保短路保護設備的額定電流不大於250V,20A。

Warnung

Dieses Produkt ist darauf angewiesen, dass im Gebäude ein Kurzschluss- bzw. Überstromschutz installiert ist. Stellen Sie sicher, dass der Nennwert der Schutzvorrichtung nicht mehr als: 250 V, 20 A beträgt.

¡Advertencia!

Este equipo utiliza el sistema de protección contra cortocircuitos (o sobrecorrientes) del edificio. Asegúrese de que el dispositivo de protección no sea superior a: 250 V, 20 A.

Attention

Pour ce qui est de la protection contre les courts-circuits (surtension), ce produit dépend de l'installation électrique du local. Vérifiez que le courant nominal du dispositif de protection n'est pas supérieur à :250 V, 20 A.

מוצר זה מסתמך על הגנה המותקנת במבנים למניעת קצר חשמלי. יש לוודא כי
המכשיר המגן מפני הקצר החשמלי הוא לא יותר מ-250VDC, 20A

هذا المنتج يعتمد على معداث الحمايت مه الدوائرالقصيرة التي تم تثبيتها في
المبنى
تأكد من أن تقييم الجهاز الوقائي ليس أكثر من : 20A, 250V

경고!

이 제품은 전원의 단락(과전류)방지에 대해서 전적으로 건물의 관련 설비에 의존합니다.
보호장치의 정격이 반드시 250V(볼트), 20A(암페어)를 초과하지 않도록 해야 합니다.

Waarschuwing

Dit product is afhankelijk van de kortsluitbeveiliging (overspanning) van uw electrische installatie. Controleer of het beveiligde aparaat niet groter gedimensioneerd is dan 250V, 20A.

Power Disconnection Warning

Warning! The system must be disconnected from all sources of power and the power cord removed from the power supply module(s) before accessing the chassis interior to install or remove system components.

電源切断の警告

システムコンポーネントの取り付けまたは取り外しのために、シャーシー内部にアクセスするには、システムの電源はすべてのソースから切断され、電源コードは電源モジュールから取り外す必要があります。

警告

在你打开机箱并安装或移除内部器件前,必须将系统完全断电,并移除电源线。

警告

在您打開機殼安裝或移除內部元件前，必須將系統完全斷電，並移除電源線。

Warnung

Das System muss von allen Quellen der Energie und vom Netzanschlusskabel getrennt sein, das von den Spg.Versorgungsteilmodulen entfernt wird, bevor es auf den Chassisinnenraum zurückgreift, um Systemsbestandteile anzubringen oder zu entfernen.

¡Advertencia!

El sistema debe ser disconnected de todas las fuentes de energía y del cable eléctrico quitado de los módulos de fuente de alimentación antes de tener acceso el interior del chasis para instalar o para quitar componentes de sistema.

Attention

Le système doit être débranché de toutes les sources de puissance ainsi que de son cordon d'alimentation secteur avant d'accéder à l'intérieur du chassis pour installer ou enlever des composants de systéme.

אזהרה מפני ניתוק חשמלי

!אזהרה

יש לנתק את המערכת מכל מקורות החשמל ויש להסיר את כבל החשמלי מהספק

לפני גישה לחלק הפנימי של המארז לצורך התקנת או הסרת רכיבים.

يجب فصم اننظاو من جميع مصادر انطاقت وإزانت سهك انكهرباء من وحدة امداد
انطاقت قبم
انصل إنى انمناطق انداخهيت نههيكم نتثبيج أو إزانت مكناث الجهاز

경고!

시스템에 부품들을 장착하거나 제거하기 위해서는 섀시 내부에 접근하기 전에 반드시 전원 공급장치로부터 연결되어있는 모든 전원과 전기코드를 분리해주어야 합니다.

Waarschuwing

Voordat u toegang neemt tot het binnenwerk van de behuizing voor het installeren of verwijderen van systeem onderdelen, dient u alle spanningsbronnen en alle stroomkabels aangesloten op de voeding(en) van de behuizing te verwijderen

Equipment Installation

Warning! Only trained and qualified personnel should be allowed to install, replace, or service this equipment.

機器の設置

トレーニングを受け認定された人だけがこの装置の設置、交換、またはサービスを許可されています。

警告

只有经过培训且具有资格的人员才能进行此设备的安装、更换和维修。

警告

只有經過受訓且具資格人員才可安裝、更換與維修此設備。

Warnung

Das Installieren, Ersetzen oder Bedienen dieser Ausrüstung sollte nur geschultem, qualifiziertem Personal gestattet werden.

¡Advertencia!

Solamente el personal calificado debe instalar, reemplazar o utilizar este equipo.

Attention

Il est vivement recommandé de confier l'installation, le remplacement et la maintenance de ces équipements à des personnels qualifiés et expérimentés.

אזהרה!

צוות מוסמך בלבד רשאי להתקין, להחליף את הציוד או לתת שירות עבור הציוד.

والمدربيه لتزكيب واستبدال أو خدمة هذا الجهاس يجب أن يسمح فقط للمنظفيه المؤهليه

경고!

훈련을 받고 공인된 기술자만이 이 장비의 설치, 교체 또는 서비스를 수행할 수 있습니다.

Waarschuwing

Deze apparatuur mag alleen worden geïnstalleerd, vervangen of hersteld door geschoold en gekwalificeerd personeel.

Restricted Area

Warning! This unit is intended for installation in restricted access areas. A restricted access area can be accessed only through the use of a special tool, lock and key, or other means of security. (This warning does not apply to workstations).

アクセス制限区域

このユニットは、アクセス制限区域に設置されることを想定しています。

アクセス制限区域は、特別なツール、鍵と錠前、その他のセキュリティの手段を用いてのみ出入りが可能です。

警告

此部件应安装在限制进出的场所，限制进出的场所指只能通过使用特殊工具、锁和钥匙或其它安全手段进出的场所。

警告

此裝置僅限安裝於進出管制區域，進出管制區域係指僅能以特殊工具、鎖頭及鑰匙或其他安全方式才能進入的區域。

Warnung

Diese Einheit ist zur Installation in Bereichen mit beschränktem Zutritt vorgesehen. Der Zutritt zu derartigen Bereichen ist nur mit einem Spezialwerkzeug, Schloss und Schlüssel oder einer sonstigen Sicherheitsvorkehrung möglich.

¡Advertencia!

Esta unidad ha sido diseñada para instalación en áreas de acceso restringido. Sólo puede obtenerse acceso a una de estas áreas mediante la utilización de una herramienta especial, cerradura con llave u otro medio de seguridad.

Attention

Cet appareil doit être installée dans des zones d'accès réservés. L'accès à une zone d'accès réservé n'est possible qu'en utilisant un outil spécial, un mécanisme de verrouillage et une clé, ou tout autre moyen de sécurité.

אזור עם גישה מוגבלת

אזהרה!

יש להתקין את היחידה באזורים שיש בהם הגבלת גישה. הגישה ניתנת בעזרת

'כלי אבטחה בלבד)מפתח, מנעול וכד.)

تخصيص هذه انحذة نترك بُها ف مناطق محظورة تم .

،مَكن انصل إن منطقت محظورة فقط من خلال استخذاو أداة خاصت

أو أ وس هُت أخري نلالأمما قفم ومفتاح

경고!

이 장치는 접근이 제한된 구역에 설치하도록 되어있습니다. 특수도구, 잠금 장치 및 키, 또는 기타 보안 수단을 통해서만 접근 제한 구역에 들어갈 수 있습니다.

Waarschuwing

Dit apparaat is bedoeld voor installatie in gebieden met een beperkte toegang. Toegang tot dergelijke gebieden kunnen alleen verkregen worden door gebruik te maken van speciaal gereedschap, slot en sleutel of andere veiligheidsmaatregelen.

Battery Handling

Warning! There is the danger of explosion if the battery is replaced incorrectly. Replace the battery only with the same or equivalent type recommended by the manufacturer. Dispose of used batteries according to the manufacturer's instructions

電池の取り扱い

電池交換が正しく行われなかった場合、破裂の危険性があります。交換する電池はメーカーが推奨する型、または同等のものを使用下さい。使用済電池は製造元の指示に従って処分して下さい。

警告

电池更换不当会有爆炸危险。请只使用同类电池或制造商推荐的功能相当的电池更换原有电池。请按制造商的说明处理废旧电池。

警告

電池更換不當會有爆炸危險。請使用製造商建議之相同或功能相當的電池更換原有電池。請按照製造商的說明指示處理廢棄舊電池。

Warnung

Bei Einsetzen einer falschen Batterie besteht Explosionsgefahr. Ersetzen Sie die Batterie nur durch den gleichen oder vom Hersteller empfohlenen Batterietyp. Entsorgen Sie die benutzten Batterien nach den Anweisungen des Herstellers.

Attention

Danger d'explosion si la pile n'est pas remplacée correctement. Ne la remplacer que par une pile de type semblable ou équivalent, recommandée par le fabricant. Jeter les piles usagées conformément aux instructions du fabricant.

¡Advertencia!

Existe peligro de explosión si la batería se reemplaza de manera incorrecta. Reemplazar la batería exclusivamente con el mismo tipo o el equivalente recomendado por el fabricante. Desechar las baterías gastadas según las instrucciones del fabricante.

אזהרה!

קיימת סכנת פיצוץ של הסוללה במידה והוחלפה בדרך לא תקינה. יש להחליף

את הסוללה בסוג התואם מחברת יצרן מומלצת.

סילוק הסוללות המשומשות יש לבצע לפי הוראות היצרן.

هناك خطر من انفجار في حالة اسحبذال البطارية بطريقة غير صحيحة فعليل
اسحبذال البطارية
فقط بنفس النع أو ما يعادلها مما أوصث به الشرمة المصنعة
جخلص من البطاريات المسحعملة وفقا لحعليمات الشرمة الصانعة

경고!

배터리가 올바르게 교체되지 않으면 폭발의 위험이 있습니다. 기존 배터리와 동일하거나 제조사에서 권장하는 동등한 종류의 배터리로만 교체해야 합니다. 제조사의 안내에 따라 사용된 배터리를 처리하여 주십시오.

Waarschuwing

Er is ontploffingsgevaar indien de batterij verkeerd vervangen wordt. Vervang de batterij slechts met hetzelfde of een equivalent type die door de fabrikant aanbevolen wordt. Gebruikte batterijen dienen overeenkomstig fabrieksvoorschriften afgevoerd te worden.

Redundant Power Supplies

Warning! This unit might have more than one power supply connection. All connections must be removed to de-energize the unit.

冗長電源装置

このユニットは複数の電源装置が接続されている場合があります。

ユニットの電源を切るためには、すべての接続を取り外さなければなりません。

警告
此部件连接的电源可能不止一个，必须将所有电源断开才能停止给该部件供电。

警告
此裝置連接的電源可能不只一個，必須切斷所有電源才能停止對該裝置的供電。

Warnung

Dieses Gerät kann mehr als eine Stromzufuhr haben. Um sicherzustellen, dass der Einheit kein trom zugeführt wird, müssen alle Verbindungen entfernt werden.

¡Advertencia!

Puede que esta unidad tenga más de una conexión para fuentes de alimentación. Para cortar por completo el suministro de energía, deben desconectarse todas las conexiones.

Attention

Cette unité peut avoir plus d'une connexion d'alimentation. Pour supprimer toute tension et tout courant électrique de l'unité, toutes les connexions d'alimentation doivent être débranchées.

אם קיים יותר מספק אחד

אזהרה!

ליחדה יש יותר מחיבור אחד של ספק. יש להסיר את כל החיבורים על מנת לרוקן

את היחידה.

قد يكون لهذا الجهاز عدة اتصالات بوحدات امداد الطاقة .

يجب إزالة كافة الاتصالات لعسل الوحدة عن الكهرباء

경고!

이 장치에는 한 개 이상의 전원 공급 단자가 연결되어 있을 수 있습니다. 이 장치에 전원을 차단하기 위해서는 모든 연결 단자를 제거해야만 합니다.

Waarschuwing

Deze eenheid kan meer dan één stroomtoevoeraansluiting bevatten. Alle aansluitingen dienen verwijderd te worden om het apparaat stroomloos te maken.

Backplane Voltage

Warning! Hazardous voltage or energy is present on the backplane when the system is operating. Use caution when servicing.

バックプレーンの電圧

システムの稼働中は危険な電圧または電力が、バックプレーン上にかかっています。

修理する際には注意ください。

警告
当系统正在进行时，背板上有很危险的电压或能量，进行维修时务必小心。

警告
當系統正在進行時，背板上有危險的電壓或能量，進行維修時務必小心。

Warnung

Wenn das System in Betrieb ist, treten auf der Rückwandplatine gefährliche Spannungen oder Energien auf. Vorsicht bei der Wartung.

¡Advertencia!

Cuando el sistema está en funcionamiento, el voltaje del plano trasero es peligroso. Tenga cuidado cuando lo revise.

Attention

Lorsque le système est en fonctionnement, des tensions électriques circulent sur le fond de panier. Prendre des précautions lors de la maintenance.

מתח בפנל האחורי

אזהרה!

קיימת סכנת מתח בפנל האחורי בזמן תפעול המערכת. יש להיזהר במהלך העבודה.

هناك خطز مه التيار الكهزبائي أوالطاقة المجبدة على اللحة
عندما يكن النظام يعمل كه حذرا عند خدمة هذا الجهاس

경고!
시스템이 동작 중일 때 후면판 (Backplane)에는 위험한 전압이나 에너지가 발생 합니다.
서비스 작업 시 주의하십시오.

Waarschuwing
Een gevaarlijke spanning of energie is aanwezig op de backplane wanneer het systeem in gebruik is. Voorzichtigheid is geboden tijdens het onderhoud.

Comply with Local and National Electrical Codes

Warning! Installation of the equipment must comply with local and national electrical codes.

地方および国の電気規格に準拠

機器の取り付けはその地方および国の電気規格に準拠する必要があります。

警告
设备安装必须符合本地与本国电气法规。

警告
設備安裝必須符合本地與本國電氣法規。

Warnung
Die Installation der Geräte muss den Sicherheitsstandards entsprechen.

¡Advertencia!
La instalacion del equipo debe cumplir con las normas de electricidad locales y nacionales.

Attention
L'équipement doit être installé conformément aux normes électriques nationales et locales.

תיאום חוקי החשמל הארצי

אזהרה!

התקנת הציוד חייבת להיות תואמת לחוקי החשמל המקומיים והארציים.

تركيب المعدات الكهربائية يجب أن يمتثل للقاويه المحلية والبطية المتعلقة بالكهرباء

경고!

현 지역 및 국가의 전기 규정에 따라 장비를 설치해야 합니다.

Waarschuwing

Bij installatie van de apparatuur moet worden voldaan aan de lokale en nationale elektriciteitsvoorschriften.

Product Disposal

Warning! Ultimate disposal of this product should be handled according to all national laws and regulations.

製品の廃棄

この製品を廃棄処分する場合、国の関係する全ての法律・条例に従い処理する必要があります。

警告

本产品的废弃处理应根据所有国家的法律和规章进行。

警告

本產品的廢棄處理應根據所有國家的法律和規章進行。

Warnung

Die Entsorgung dieses Produkts sollte gemäß allen Bestimmungen und Gesetzen des Landes erfolgen.

¡Advertencia!

Al deshacerse por completo de este producto debe seguir todas las leyes y reglamentos nacionales.

Attention

La mise au rebut ou le recyclage de ce produit sont généralement soumis à des lois et/ou directives de respect de l'environnement. Renseignez-vous auprès de l'organisme compétent.

סילוק המוצר

אזהרה!

סילוק סופי של מוצר זה חייב להיות בהתאם להנחיות וחוקי המדינה.

التخلص النهائي من هذا المنتج ينبغي التعامل معه وفقا لجميع القانين واللائح البطنية عند

경고!

이 제품은 해당 국가의 관련 법규 및 규정에 따라 폐기되어야 합니다.

Waarschuwing

De uiteindelijke verwijdering van dit product dient te geschieden in overeenstemming met alle nationale wetten en reglementen.

Hot Swap Fan Warning

Warning! Hazardous moving parts. Keep away from moving fan blades. The fans might still be turning when you remove the fan assembly from the chassis. Keep fingers, screwdrivers, and other objects away from the openings in the fan assembly's housing.

ファン・ホットスワップの警告

警告!回転部品に注意。運転中は回転部(羽根)に触れないでください。シャーシから冷却ファン装置を取り外した際、ファンがまだ回転している可能性があります。ファンの開口部に、指、ドライバー、およびその他のものを近づけないで下さい。

警告!

警告！危险的可移动性零件。请务必与转动的风扇叶片保持距离。 当您从机架移除风扇装置，风扇可能仍在转动。小心不要将手指、螺丝起子和其他物品太靠近风扇

警告

危險的可移動性零件。請務必與轉動的風扇葉片保持距離。 當您從機架移除風扇裝置，風扇可能仍在轉動。小心不要將手指、螺絲起子和其他物品太靠近風扇。

Warnung

Gefährlich Bewegende Teile. Von den bewegenden Lüfterblätter fern halten. Die Lüfter drehen sich u. U. noch, wenn die Lüfterbaugruppe aus dem Chassis genommen wird. Halten Sie Finger, Schraubendreher und andere Gegenstände von den Öffnungen des Lüftergehäuses entfernt.

¡Advertencia!

Riesgo de piezas móviles. Mantener alejado de las aspas del ventilador. Los ventiladores podran dar vuelta cuando usted quite ell montaje del ventilador del chasis. Mandtenga los dedos, los destornilladores y todos los objetos lejos de las aberturas del ventilador

Attention

Pieces mobiles dangereuses. Se tenir a l'ecart des lames du ventilateur Il est possible que les ventilateurs soient toujours en rotation lorsque vous retirerez le bloc ventilateur du châssis. Prenez garde à ce que doigts, tournevis et autres objets soient éloignés du logement du bloc ventilateur.

אזהרה!

חלקים נעים מסוכנים. התרחק מלהבי המאוורר בפעולהכאשר מסירים את חלקי
המאוורר מהמארז, יתכן והמאוררים עדיין עובדים. יש להרחיק למרחק בטוח את
האצבעות וכלי עבודה שונים מהפתחים בתוך המאוורר

تحذير! أجزاء متحركة خطرة. ابتعد عن شفرات المروحة المتحركة.من الممكن أن
المراوح لا تزال تدورعند إزالة كتلة المروحة من الهيكل يجب إبقاء الأصابع
.ومفكات البراغي وغيرها من الأشياء بعيدا عن الفتحات في كتلة المروحة

경고!

움직이는 위험한 부품. 회전하는 송풍 날개에 접근하지 마세요. 섀시로부터 팬 조립품을 제거할 때 팬은 여전히 회전하고 있을 수 있습니다. 팬 조림품 외관의 열려있는 부분들로부터 손가락 및 스크류드라이버, 다른 물체들이 가까이 하지 않도록 배치해 주십시오.

Waarschuwing

Gevaarlijk bewegende onderdelen. Houd voldoende afstand tot de bewegende ventilatorbladen. Het is mogelijk dat de ventilator nog draait tijdens het verwijderen van het ventilatorsamenstel uit het chassis. Houd uw vingers, schroevendraaiers en eventuele andere voorwerpen uit de buurt van de openingen in de ventilatorbehuizing.

Power Cable and AC Adapter

Warning! When installing the product, use the provided or designated connection cables, power cables and AC adaptors. Using any other cables and adaptors could cause a malfunction or a fire. Electrical Appliance and Material Safety Law prohibits the use of UL or CSA -certified cables (that have UL/CSA shown on the cord) for any other electrical devices than products designated by Supermicro only.

電源コードとACアダプター

製品を設置する場合、提供または指定および購入された接続ケーブル、電源コードとACアダプターを 該当する地域の条例や安全基準に適合するコードサイズやプラグと共に使用下さい。他のケーブルやアダプタを使用すると故障や火災の原因になることがあります。

電気用品安全法は、ULまたはCSA認定のケーブル(UL/CSEマークがコードに表記)を Supermicro が指定する製品以外に使用することを禁止しています。

警告

安装此产品时,请使用本身提供的或指定的或采购的连接线,电源线和电源适配器，包含遵照当地法规和安全要求的合规的电源线尺寸和插头.使用其它线材或适配器可能会引起故障或火灾。除了Supermicro所指定的产品,电气用品和材料安全法律规定禁止
使用未经UL或CSA认证的线材。(线材上会显示UL/CSA符号)。

警告

安裝此產品時,請使用本身提供的或指定的或採購的連接線,電源線和電源適配器，包含遵照當地法規和安全要求的合規的電源線尺寸和插頭.使用其它線材或適配器可能會引起故障或火災。除了Supermicro所指定的產品,電氣用品和材料安全法律規定禁止
使用未經UL或CSA認證的線材。 (線材上會顯示UL/CSA符號)。

Warnung

Nutzen Sie beim Installieren des Produkts ausschließlich die von uns zur Verfügung gestellten Verbindungskabeln, Stromkabeln und/oder Adapater, die Ihre örtlichen Sicherheitsstandards einhalten. Der Gebrauch von anderen Kabeln und Adapter können Fehlfunktionen oder Feuer verursachen. Die Richtlinien untersagen das Nutzen von UL oder CAS zertifizierten Kabeln (mit UL/CSA gekennzeichnet), an Geräten oder Produkten die nicht mit Supermicro gekennzeichnet sind.

¡Advertencia!

Cuando instale el producto, utilice la conexión provista o designada o procure cables, Cables de alimentación y adaptadores de CA que cumplan con los códigos locales y los requisitos de seguridad, incluyendo el tamaño adecuado del cable y el enchufe. El uso de otros cables y adaptadores podría causar un mal funcionamiento o un incendio. La Ley de Seguridad de Aparatos Eléctricos y de Materiales prohíbe El uso de cables certificados por UL o CSA (que tienen el certificado UL / CSA en el código) para cualquier otros dispositivos eléctricos que los productos designados únicamente por Supermicro.

Attention

Lors de l'installation du produit, utilisez les cables de connection fournis ou désigné ou achetez des cables, cables de puissance et adaptateurs respectant les normes locales et les conditions de securite y compris les tailles de cables et les prises electriques appropries. L'utilisation d'autres cables et adaptateurs peut provoquer un dysfonctionnement ou un incendie. Appareils électroménagers et la Loi sur la Sécurité Matériel interdit l'utilisation de câbles certifies- UL ou CSA (qui ont UL ou CSA indiqué sur le code) pour tous les autres appareils électriques sauf les produits désignés par Supermicro seulement.

AC ימאתמו מיילמשח מילבכ

!הרהזא

ךרוצל ומאתוה וא ושכרנ רשא AC מימאתמו מיקפס ,מילבכב שמתשהל שי ,רצומה תא מיניקתמ רשאכ לכב שומיש . עקתהו לבכה לש הנוכנ הדימ ללוכ ,תוימוקמה תוחיטבה תושירדל ומאתוה רשאו ,הנקתהה למשחה ירישכמב שומישה יקוחל מאתהב .ילמשח רצק וא הלקתל מורגל לולע ,רחא גוסמ מאתמ וא לבכ לש דוק מהילע עיפומ רשאכ) CSA-ב וא UL -ב מיכמסומה מילבכב שמתשהל רוסיא מייק ,תוחיטבה יקוחו .דבלב Supermicro י"ע מאתוה רשא רצומב קר אלא ,רחא ילמשח רצומ לכ רובע UL/CSA)

عند تركيب المنتج، قم باستخدام التوصيلات المتوفرة أو المحددة أو قم بشراء الكابلات الكهربائية ومحولات التيار المتردد مع الالتزام بقوانين ومتطلبات السلامة المحلية بما في ذلك حجم الموصل والقابس السليم. استخدام أي كابلات ومحولات أخرى قد يتسبب في عطل أو حريق. يحظر قانون السلامة للأجهزة الكهربائية والمعدات استخدام الكابلات المعتمدة من قبل UL أو CSA والتي تحمل علامة (UL/CSA) مع أي معدات أخرى غير المنتجات المعنية والمحددة من قبل Supermicro.

전원 케이블 및 AC 어댑터

경고! 제품을 설치할 때 현지 코드 및 적절한 굵기의 코드와 플러그를 포함한 안전 요구 사항을 준수하여 제공되거나 지정된 연결 혹은 구매 케이블, 전원 케이블 및 AC 어댑터를 사용하십시오.

다른 케이블이나 어댑터를 사용하면 오작동이나 화재가 발생할 수 있습니다. 전기 용품 안전법은 UL 또는 CSA 인증 케이블 (코드에 UL / CSA가 표시된 케이블)을 Supermicro 가 지정한 제품 이외의 전기 장치에 사용하는 것을 금지합니다.

Stroomkabel en AC-Adapter

Waarschuwing! Bij het aansluiten van het Product uitsluitend gebruik maken van de geleverde Kabels of een andere geschikte aan te schaffen Aansluitmethode, deze moet altijd voldoen aan de lokale voorschriften en veiligheidsnormen, inclusief de juiste kabeldikte en stekker. Het gebruik van niet geschikte Kabels en/of Adapters kan een storing of brand veroorzaken. Wetgeving voor Elektrische apparatuur en Materiaalveiligheid verbied het gebruik van UL of CSA -gecertificeerde Kabels (met UL/CSA in de code) voor elke andere toepassing dan de door Supermicro hiervoor beoogde Producten.

Disclaimer (cont.)

The products sold by Supermicro are not intended for and will not be used in life support systems, medical equipment, nuclear facilities or systems, aircraft, aircraft devices, aircraft/emergency communication devices or other critical systems whose failure to perform be reasonably expected to result in significant injury or loss of life or catastrophic property damage. Accordingly, Supermicro disclaims any and all liability, and should buyer use or sell such products for use in such ultra-hazardous applications, it does so entirely at its own risk. Furthermore, buyer agrees to fully indemnify, defend and hold Supermicro harmless for and against any and all claims, demands, actions, litigation, and proceedings of any kind arising out of or related to such ultra-hazardous use or sale.

Disclaimer (cont.)

The products sold by Supermicro are not intended for and will not be used in life support systems, medical equipment, nuclear facilities or systems, aircraft, aircraft devices, aircraft/emergency communication devices or other critical systems whose failure to perform be reasonably expected to result in significant injury or loss of life or catastrophic property damage. Accordingly, Supermicro disclaims any and all liability, and should buyer use or sell such products for use in such ultra-hazardous applications, it does so entirely at its own risk. Furthermore, buyer agrees to fully indemnify, defend and hold Supermicro harmless for and against any and all claims, demands, actions, litigation, and proceedings of any kind arising out of or related to such ultra-hazardous use or sale.