SUPER®

A+ Server
1122GG-TF

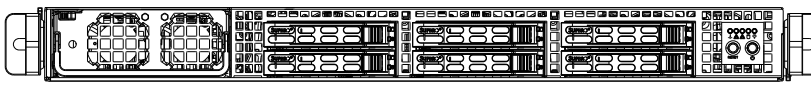

USER'S MANUAL

Revision 1.0a

The information in this User's Manual has been carefully reviewed and is believed to be accurate. The vendor assumes no responsibility for any inaccuracies that may be contained in this document, makes no commitment to update or to keep current the information in this manual, or to notify any person or organization of the updates. **Please Note: For the most up-to-date version of this manual, please see our web site at www.supermicro.com.**

Super Micro Computer, Inc. ("Supermicro") reserves the right to make changes to the product described in this manual at any time and without notice. This product, including software and documentation, is the property of Supermicro and/or its licensors, and is supplied only under a license. Any use or reproduction of this product is not allowed, except as expressly permitted by the terms of said license.

IN NO EVENT WILL SUPERMICRO BE LIABLE FOR DIRECT, INDIRECT, SPECIAL, INCIDENTAL, SPECULATIVE OR CONSEQUENTIAL DAMAGES ARISING FROM THE USE OR INABILITY TO USE THIS PRODUCT OR DOCUMENTATION, EVEN IF ADVISED OF THE POSSIBILITY OF SUCH DAMAGES. IN PARTICULAR, SUPERMICRO SHALL NOT HAVE LIABILITY FOR ANY HARDWARE, SOFTWARE, OR DATA STORED OR USED WITH THE PRODUCT, INCLUDING THE COSTS OF REPAIRING, REPLACING, INTEGRATING, INSTALLING OR RECOVERING SUCH HARDWARE, SOFTWARE, OR DATA.

Any disputes arising between manufacturer and customer shall be governed by the laws of Santa Clara County in the State of California, USA. The State of California, County of Santa Clara shall be the exclusive venue for the resolution of any such disputes. Super Micro's total liability for all claims will not exceed the price paid for the hardware product.

FCC Statement: This equipment has been tested and found to comply with the limits for a Class A digital device pursuant to Part 15 of the FCC Rules. These limits are designed to provide reasonable protection against harmful interference when the equipment is operated in a commercial environment. This equipment generates, uses, and can radiate radio frequency energy and, if not installed and used in accordance with the manufacturer's instruction manual, may cause harmful interference with radio communications. Operation of this equipment in a residential area is likely to cause harmful interference, in which case you will be required to correct the interference at your own expense.

California Best Management Practices Regulations for Perchlorate Materials: This Perchlorate warning applies only to products containing CR (Manganese Dioxide) Lithium coin cells. "Perchlorate Material-special handling may apply. See www.dtsc.ca.gov/hazardouswaste/perchlorate"

WARNING: Handling of lead solder materials used in this product may expose you to lead, a chemical known to the State of California to cause birth defects and other reproductive harm.

Manual Revision 1.0a
Release Date: December 03, 2013

Unless you request and receive written permission from Super Micro Computer, Inc., you may not copy any part of this document.

Information in this document is subject to change without notice. Other products and companies referred to herein are trademarks or registered trademarks of their respective companies or mark holders.

Copyright © 2013 by Super Micro Computer, Inc.
All rights reserved.
Printed in the United States of America

Preface

About This Manual

This manual is written for professional system integrators and PC technicians. It provides information for the installation and use of the A+ Server 1122GG-TF. Installation and maintenance should be performed by experienced technicians only.

The A+ Server 1122GG-TF is a 1U rackmount server based on the SC118GTS-1400BP server chassis and the Supermicro H8DGG-QF serverboards.

Manual Organization

Chapter 1: Introduction

The first chapter provides a checklist of the main components included with the server system and describes the main features of the Super H8DGG-QF serverboard and the SC118GTS-1400BP chassis.

Chapter 2: Server Installation

This chapter describes the steps necessary to install the A+ Server 1122GG-TF into a rack and check out the server configuration prior to powering up the system. If your server was ordered without the processor and memory components, this chapter will refer you to the appropriate sections of the manual for their installation.

Chapter 3: System Interface

Refer to this chapter for details on the system interface, which includes the functions and information provided by the control panel on the chassis as well as other LEDs located throughout the system.

Chapter 4: Warning Statements for AC Systems

You should thoroughly familiarize yourself with this chapter for a general overview of safety precautions that should be followed when installing and servicing the A+ Server 1122GG-TF.

Chapter 5: Advanced Serverboard Setup

Chapter 5 provides detailed information on the H8DGG-QF serverboard, including the locations and functions of connectors, headers and jumpers. Refer to this chapter when adding or removing processors or main memory and when reconfiguring the serverboard.

Chapter 6: Advanced Chassis Setup

Refer to Chapter 6 for detailed information on the SC118GTS-1400BP 1U rackmount server chassis. You should follow the procedures given in this chapter when installing, removing or reconfiguring SATA or peripheral drives and when replacing system power supply units and cooling fans.

Chapter 7: BIOS

The BIOS chapter includes an introduction to BIOS and provides detailed information on running the CMOS Setup Utility.

Appendix A: BIOS Error Beep Codes

Appendix B: Installing Windows

Appendix C: System Specifications

Contents

Chapter 1 Introduction

1-1 Overview 1-1
1-2 Serverboard Features 1-2
Processors 1-2
Memory 1-2
Serial ATA 1-2
PCI Expansion Slots 1-2
Ethernet Ports 1-2
Onboard Controllers/Ports 1-3
Graphics Controller 1-3
Other Features 1-3
1-3 Server Chassis Features 1-5
Drives 1-5
System Power 1-5
Front Control Panel 1-5
Cooling System 1-5
1-4 Contacting Supermicro 1-6

Chapter 2 Server Installation

2-1 Overview 2-1
2-2 Unpacking the System 2-1
2-3 Preparing for Setup 2-1
Choosing a Setup Location 2-1
2-4 Warnings and Precautions! 2-2
Rack Precautions 2-2
Server Precautions 2-2
Rack Mounting Considerations 2-3
Ambient Operating Temperature 2-3
Reduced Airflow 2-3
Mechanical Loading 2-3
Circuit Overloading 2-3
Reliable Ground 2-3
2-5 Installing the System into a Rack 2-4
Identifying the Sections of the Rack Rails 2-4
Installing the Inner Rail Extensions 2-5
Assembling the Outer Rails 2-6
Installing the Outer Rails onto the Rack 2-7

Installing and Removing the Server 2-8
Installing the Server into a Telco Rack 2-9
2-6 Checking the Serverboard Setup 2-10
2-7 Checking the Drive Bay Setup 2-11

Chapter 3 System Interface

3-1 Overview 3-1
3-2 Control Panel Buttons 3-2
Reset 3-2
Power 3-2
3-3 Control Panel LEDs 3-2
Information LED 3-2
NIC2 3-3
NIC1 3-3
HDD 3-3
Power 3-3
3-4 SATA Drive Carrier LEDs 3-3

Chapter 4 Standardized Warning Statements for AC Systems

4-1 About Standardized Warning Statements 4-1
Warning Definition 4-1
Installation Instructions 4-4
Circuit Breaker 4-5
Power Disconnection Warning 4-6
Equipment Installation 4-8
Restricted Area 4-9
Battery Handling 4-10
Redundant Power Supplies 4-12
Backplane Voltage 4-13
Comply with Local and National Electrical Codes 4-14
Product Disposal 4-15
Hot Swap Fan Warning 4-16
Power Cable and AC Adapter 4-18

Chapter 5 Advanced Serverboard Setup

5-1 Handling the Serverboard 5-1
Precautions 5-1
Unpacking 5-1
Front Control Panel 5-2
5-2 I/O Ports and Control Panel Connections 5-2

5-3 Processor and Heatsink Installation 5-3
Installing a Passive CPU Heatsink 5-5
Removing the Heatsink 5-5
5-4 Installing Memory 5-6
DIMM Module Population Configuration 5-8
5-5 Serverboard Details 5-9
H8DGG-QF Quick Reference 5-10
5-6 Connector Definitions 5-11
5-7 Jumper Settings 5-17
Explanation of Jumpers 5-17
5-8 Onboard Indicators 5-19
5-9 SATA Drive Connections 5-20
5-10 Enabling SATA RAID 5-21
Serial ATA (SATA) 5-21
Installing the OS/SATA Driver 5-21
Building a Driver Diskette 5-21
Enabling SATA RAID in the BIOS 5-22
Using the Adaptec RAID Utility 5-23
Installing the RAID Driver During OS Installation 5-23
5-11 Installing Software 5-24
SuperDoctor III 5-25
5-12 Serverboard Battery 5-26

Chapter 6 Advanced Chassis Setup

6-1 Static-Sensitive Devices 6-1
Precautions 6-1
6-2 Control Panel 6-2
6-3 Installing or Removing Drives 6-2
Accessing the Drive Bays 6-2
Hard Drive Installation 6-3
Peripheral Drive Installation 6-6
6-4 Installing the Air Shroud 6-7
Checking the Air Flow 6-8
6-5 Installing Expansion Cards 6-8
Installing an Expansion Card on the Left Side 6-9
Installing an Expansion Card in the Center 6-10
Installing an Expansion Card on the Right Side 6-11

6-6 System Fans 6-13
Fan Numbering in the BIOS 6-13
System Fan Failure 6-14
6-7 Power Supply 6-15
Power Supply Replacement 6-15

Chapter 7 BIOS

7-1 Introduction 7-1
7-2 Main Menu 7-2
7-3 Advanced Settings Menu 7-2
7-4 Security Menu 7-20
7-5 Boot Settings Menu 7-21
7-6 Exit Menu 7-22

Appendix A BIOS Error Beep Codes

Appendix B Installing Windows

B-1 Installing Windows to a RAID System B-1
B-2 Installing Windows to a Non-RAID System B-2

Appendix C System Specifications

Chapter 1

Introduction

1-1 Overview

The A+ Server 1122GG-TF is a 1U server comprised of the SC118G-1400B chassis and a H8DGG-QF serverboard. Please refer to our web site for information on operating systems that have been certified for use with the server (www.supermicro.com).

In addition to the serverboard and chassis, various hardware components may have been included with the system, as listed below.

- SATA Accessories:
  Six (3) 2.5-inch hard drive trays (MCP-220-00047-0B)
  One (1) internal HDD backplane (BPN-SAS-118TQ)
- One (1) PCI Express x8 (in x16) riser card (RSC-R1UG-E16S)
- One (1) SC818 Air Shroud for twin motherboard (MCP-310-81803-0B)
- Two (2) passive CPU heatsinks (SNK-P0042P)
- Eight (8) cooling fans, 4cm counter-rotating (FAN-0141L4)
- Four (4) cables (CBL-0157L, CBL-0227L, CBL-0390L, CBL-0206L)
- One set rack mount rails (MCP-290-00054)

Note: For your system to work properly, please follow the links below to download all necessary drivers/utilities and the user's manual for your server.

- Product manuals: http://www.supermicro.com/support/manuals/
- Product drivers and utilities: ftp://ftp.supermicro.com
- Product safety information:
  http://super-dev/about/policies/safety_information.cfm

For support, email support@supermicro.com.

1-2 Serverboard Features

The H8DGG-QF dual processor serverboard is based upon two AMD SR5690 chipsets and one SP5100 Southbridge chipset.

Below are the main features of the serverboards.

Processors

The serverboard supports two AMD Opteron 6000 series (AMD Socket G34 type) processors. Please refer to our web site for a complete listing of supported processors (www.supermicro.com).

Memory

The serverboard has sixteen single/dual/tri/quad channel DIMM sockets that can support up to 128 GB of ECC/Non-ECC UDIMM or up to 512 GB of ECC RDIMM SDRAM. See Chapter 5 for more details on installing memory into the system.

Serial ATA

The South Bridge (SP5100) of the chipset includes a Serial ATA controller for six Gb/s SATA drives. The hot-swappable SATA drives are connected to a backplane that provides power, bus termination and configuration settings. RAID 0 and 1 are supported. Refer to the support area of our web site for procedures on setting up RAID on your system.

PCI Expansion Slots

The H8DGG-QF serverboard has two PCI-Express 2.0 x8 (in a x16) slots and three PCI-Express 2.0 x16 slots. In the 1122GG-TF server configuration, a riser card is pre-installed to support expansion cards.

The serverboard supports two double-width graphic processor units (GPUs) in place of the full-height, full-width expansion cards.

Ethernet Ports

An Intel® network controller is integrated into each of the serverboards to support two Gigabit LAN ports (100/1000Base-T/1000BaseTX, RJ45 output).

Onboard Controllers/Ports

Onboard I/O backpanel ports on each serverboard include one COM port, a VGA port, two USB ports, a dedicated IPMI LAN port and two Gigabit LAN (NIC) ports.

Graphics Controller

The H8DGG-QF features an integrated Matrox G200eW graphics chip, which includes 16 MB of DDR2 memory.

Other Features

Other onboard features that promote system health include voltage monitors, auto-switching voltage regulators, chassis and CPU overheat sensors, Watch Dog/NMI, Wake-On-LAN (WOL), UID/Remote UID, virus protection and BIOS rescue.

Figure 1-1.SR5690/SP5100 Chipset: System Block Diagram

Note: This is a general block diagram. Please see Chapter 5 for details.

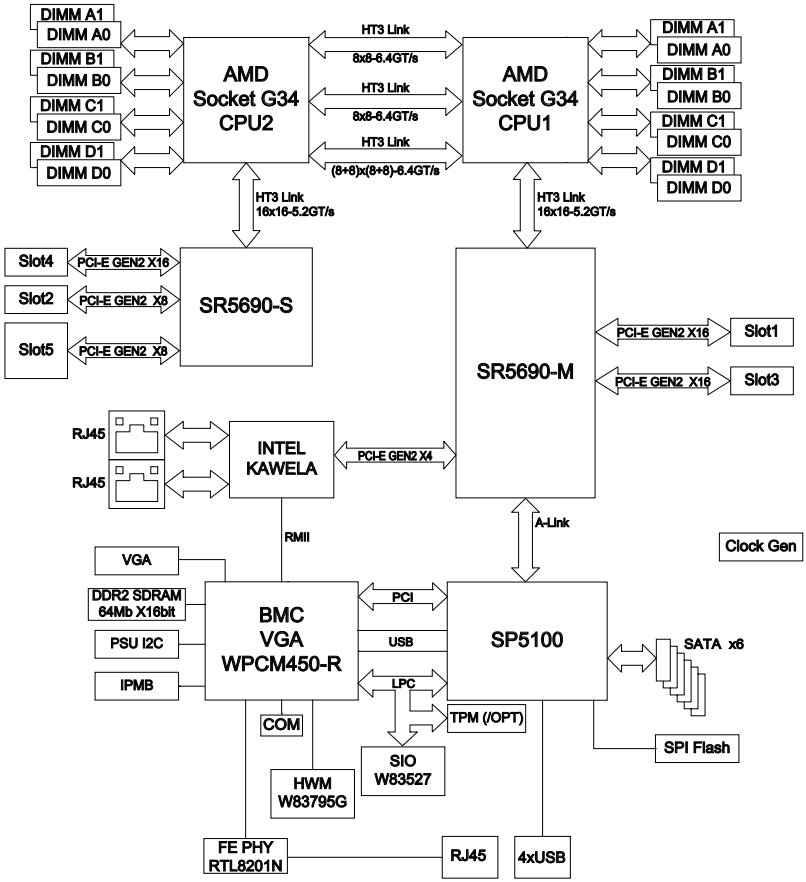

1-3 Server Chassis Features

Drives

The SC118G chassis includes six 2.5" drive bays, that can accomodate hot-swappable SATA drives.

System Power

The SC118G features a Gold Level 1400 W high-efficiency power supply. See Chapter 6 for details.

Front Control Panel

The control panel provides a system monitoring and control interface. LEDs indicate system power, HDD activity, network activity, system overheat and power supply failure. A main power button and a system reset button are also included.

Cooling System

The SC118G has an innovative cooling design that includes eight 4-cm counter-rotating PWM (Pulse Width Modulated) fans. Four are located in the middle section of the chassis, and two on each side for expansion cards. The power supply module also includes a cooling fan. All chassis and power supply fans operate continuously.

An air shroud channels the airflow from the system fans to efficiently cool the processors and memory.

1-4 Contacting Supermicro

Headquarters

Address:	Super Micro Computer, Inc. 980 Rock Ave. San Jose, CA 95131 U.S.A.
Tel:	+1 (408) 503-8000
Fax:	+1 (408) 503-8008
Email:	marketing@supermicro.com (General Information) support@supermicro.com (Technical Support)
Web Site:	www.supermicro.com

Europe

Address:	Super Micro Computer B.V. Het Sterrenbeeld 28, 5215 ML 's-Hertogenbosch, The Netherlands
Tel:	+31 (0) 73-6400390
Fax:	+31 (0) 73-6416525
Email:	sales@supermicro.nl (General Information) support@supermicro.nl (Technical Support) rma@supermicro.nl (Customer Support)
Web Site:	www.supermicro.com

Asia-Pacific

Address:	Super Micro Computer, Inc. 3F, No. 150, Jian 1st Rd. Zhonghe Dist., New Taipei City 235 Taiwan (R.O.C)
Tel:	+886-(2) 8226-3990
Fax:	+886-(2) 8226-3992
Email:	support@supermicro.com.tw
Tel:	+886-(2)-8226-3990
Web Site:	www.supermicro.com.tw

Chapter 2

Server Installation

2-1 Overview

This chapter provides a quick setup checklist to get your A+ Server up and running. Following these steps should enable you to have the system operational within a minimum amount of time. This quick setup assumes that your system has come to you with the processors and memory preinstalled. If your system is not already fully integrated with a serverboard, processors, system memory etc., please turn to the chapter or section noted in each step for details on installing specific components.

2-2 Unpacking the System

You should inspect the box the system was shipped in and note if it was damaged in any way. If the server itself shows damage you should file a damage claim with the carrier who delivered it.

2-3 Preparing for Setup

Decide on a suitable location for the rack unit that will hold the server. It should be situated in a clean, dust-free area that is well ventilated. Avoid areas where heat, electrical noise and electromagnetic fields are generated. You will also need it placed near a grounded power outlet. Read the Rack and Server Precautions in the next section.

The box the server was shipped in should include two sets of rail assemblies, two rail mounting brackets and the mounting screws you will need to install the system into the rack. Follow the steps in the order given to complete the installation process in a minimum amount of time. Please read this section in its entirety before you begin the installation procedure outlined in the sections that follow.

Choosing a Setup Location

- Leave enough clearance in front of the rack to enable you to open the front door completely (~25 inches) and approximately 30 inches of clearance in

the back of the rack to allow for sufficient airflow and ease in servicing.This product is for installation only in a Restricted Access Location (dedicated equipment rooms, service closets and the like).

- This product is not suitable for use with visual display work place devices acccording to §2 of the the German Ordinance for Work with Visual Display Units.

2-4 Warnings and Precautions!

Rack Precautions

- Ensure that the leveling jacks on the bottom of the rack are fully extended to the floor with the full weight of the rack resting on them.
- In single rack installation, stabilizers should be attached to the rack. In multiple rack installations, the racks should be coupled together.
- Always make sure the rack is stable before extending a component from the rack.
- You should extend only one component at a time - extending two or more simultaneously may cause the rack to become unstable.
- Rack-mounted equipment should not be used as a shelf or work space.

Server Precautions

- Review the electrical and general safety precautions in Chapter 4.
- Determine the placement of each component in the rack *before* you install the rails.
- Install the heaviest server components on the bottom of the rack first, and then work up.
- Use a regulating uninterruptible power supply (UPS) to protect the server from power surges, voltage spikes and to keep your system operating in case of a power failure.
- Allow the hot plug SATA drives and power supply modules to cool before touching them.
- Always keep the rack's front door and all panels and components on the servers closed when not servicing to maintain proper cooling.

Rack Mounting Considerations

Ambient Operating Temperature

If installed in a closed or multi-unit rack assembly, the ambient operating temperature of the rack environment may be greater than the ambient temperature of the room. Therefore, consideration should be given to installing the equipment in an environment compatible with the manufacturer's maximum rated ambient temperature (Tmra).

Reduced Airflow

Equipment should be mounted into a rack so that the amount of airflow required for safe operation is not compromised.

Mechanical Loading

Equipment should be mounted into a rack so that a hazardous condition does not arise due to uneven mechanical loading.

Circuit Overloading

Consideration should be given to the connection of the equipment to the power supply circuitry and the effect that any possible overloading of circuits might have on overcurrent protection and power supply wiring. Appropriate consideration of equipment nameplate ratings should be used when addressing this concern.

Reliable Ground

A reliable ground must be maintained at all times. To ensure this, the rack itself should be grounded. Particular attention should be given to power supply connections other than the direct connections to the branch circuit (i.e. the use of power strips, etc.).

Warning! To prevent bodily injury when mounting or servicing this unit in a rack, you must take special precautions to ensure that the system remains stable. The following guidelines are provided to ensure your safety:



This unit should be mounted at the bottom of the rack if it is the only unit in the rack.

- When mounting this unit in a partially filled rack, load the rack from the bottom to the top with the heaviest component at the bottom of the rack.
- If the rack is provided with stabilizing devices, install the stabilizers before mounting or servicing the unit in the rack.

2-5 Installing the System into a Rack

This section provides information on installing the SC818G chassis into a rack unit with the rails provided. There are a variety of rack units on the market, which may mean that the assembly procedure will differ slightly. You should also refer to the installation instructions that came with the rack unit you are using.

Note: This rail will fit a rack between 26" and 33.5" deep.

Identifying the Sections of the Rack Rails

The chassis package includes two rack rail assemblies in the rack mounting kit. Each assembly consists of two sections: an inner fixed chassis rail that secures directly to the server chassis and an outer fixed rack rail that secures directly to the rack itself.

Figure 2-1. Identifying the Sections of the Rack Rails

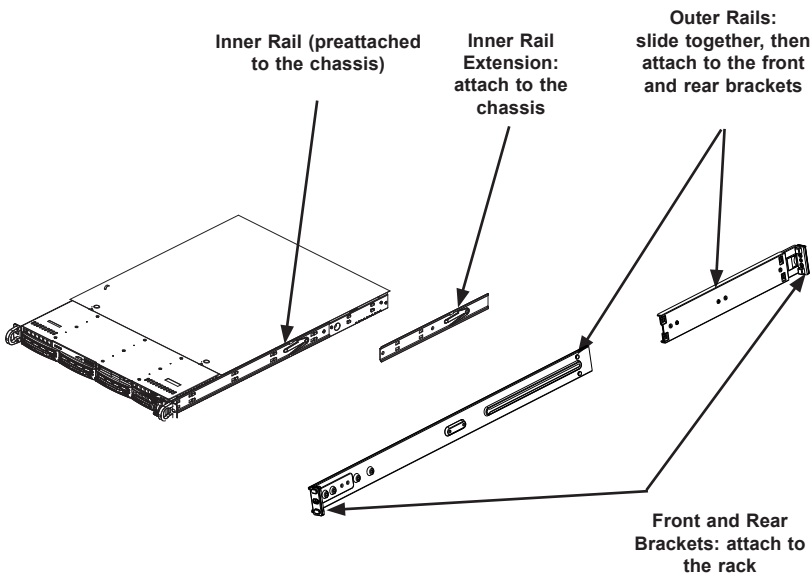

Installing the Inner Rail Extensions

The SC818G chassis includes a set of inner rack rails in two sections: inner rails (A) and inner rail extensions (B). The inner rails are preattached and do not interfere with normal use of the chassis if you decide not to install to a server rack. Attaching the inner rail extensions to to the inner rails stabilizes the chassis within the rack.

Installing the Inner Rail Extensions

1. Place the inner rail extensions (B) over the preattached inner rails (A) which are attached to the side of the chassis. Align the hooks of the inner rail with the rail extension holes. Make sure the extension faces "outward" just like the inner rail.
2. Slide the extension toward the front of the chassis.
3. Secure the chassis with screws as illustrated.
4. Repeat steps 1-3 for the other inner rail extension.

Figure 2-2. Installing the Inner Rails

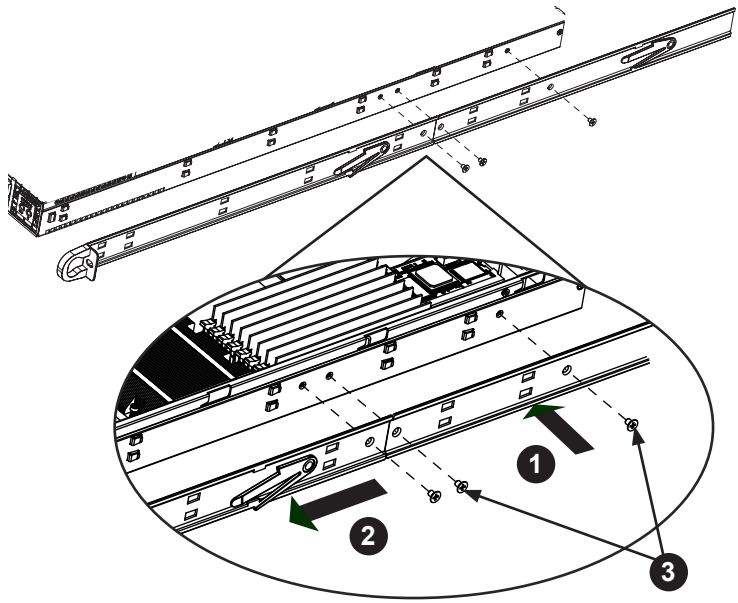

Assembling the Outer Rails

Each outer rail is in two sections that must be assembled before mounting on to the rack.

Assembling the Outer Rails

1. Identify the left and right outer rails by examining the ends, which bend outward.
2. Slide the front section of the outer rail (A), into the rear section of the outer rail (B).

Figure 2-3. Assembling the Outer Rails

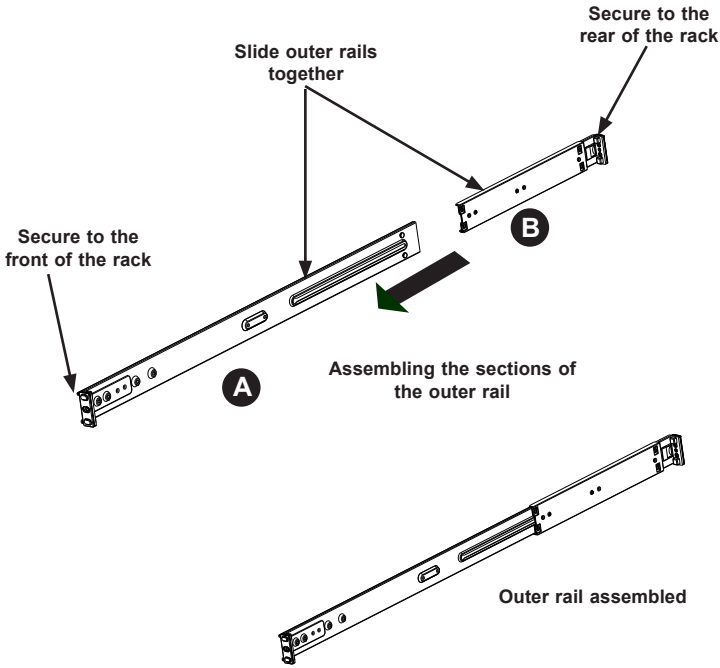

Installing the Outer Rails onto the Rack

Outer Rail Installation

1. Adjust the outer rails to the proper length so that the outer rail fits snugly within the rack.
2. Align the holes on the front of the outer rail, with the holes on the front of the rack (C) and secure with the screws provided.
3. Align the holes on the rear of the outer rail to the holes on the rack (D) and secure with the screws provided.
4. Repeat the procedure with the second outer rail assembly.

Figure 2-4. Installing the Outer Rails to the Rack

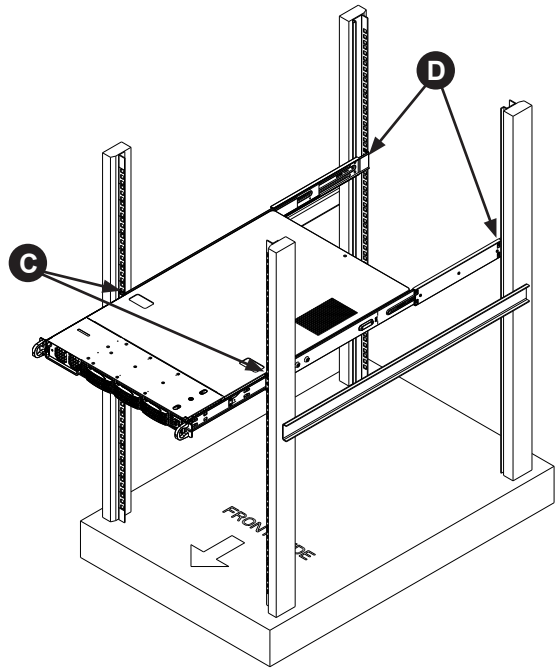

Note: The figure above is for illustrative purposes only. Always install servers on the bottom of the rack first.

Installing and Removing the Server

Installation into the Rack

1. Slide the inner rail extensions into the front of the outer rails.
2. Push the chassis backward into the rack until it clicks into the locked postion.

Removing from the Rack

1. Press the outer rail latch to release the chassis (Figure 2-5).
2. Carefully slide the chassis forward, off the outer rails and out of the chassis.

Figure 2-5. Removing the Chassis from the Rack

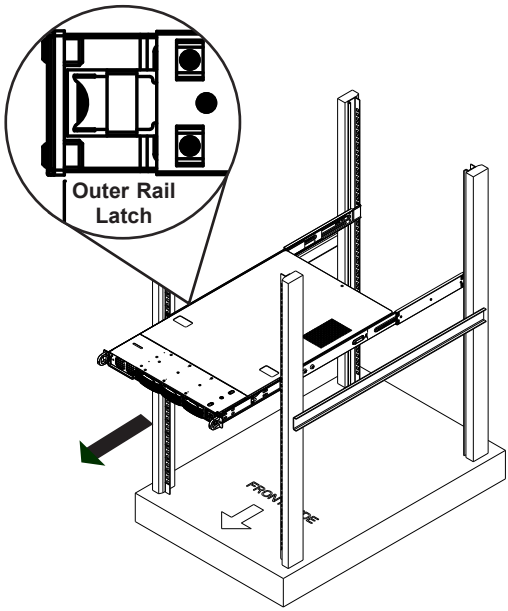

Warning: Do not pick up the server with the front handles. They are designed to pull the system from a rack only.

Installing the Server into a Telco Rack

Optional brackets (p/n MCP-290-00016-0N) are needed to install the server to a telco (open type) rack.

To install the server into a Telco type rack, use the two L-shaped brackets on either side of the chassis (four total). First, determine how far follow the server will extend out the front of the rack. Larger chassis should be positioned to balance the weight between front and back. If a bezel is included on your server, remove it. Then attach the two front brackets to each side of the chassis, then the two rear brackets positioned with just enough space to accommodate the width of the telco rack. Finish by sliding the chassis into the rack and tightening the brackets to the rack.

Stability hazard. The rack stabilizing mechanism must be in place, or the rack must be bolted to the floor before you slide the unit out for servicing. Failure to stabilize the rack can cause the rack to tip over.

Figure 2-6. Installing the Server into a Telco Rack

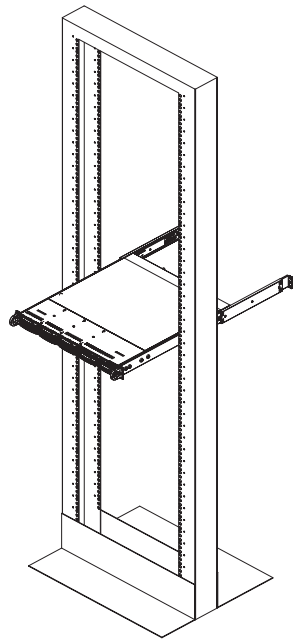

2-6 Checking the Serverboard Setup

After you install the server in the rack, you will need to open the unit to make sure the serverboard is properly installed and all the connections have been made.

Removing the Chassis Cover (Figure 2-7)

1. Remove the three screws securing the top cover to the chassis.
2. Press both of the release tabs at the same time to release the cover
3. Slide the cover toward the rear of the chassis.
4. Lift the cover up and off of the chassis.

Caution: Except for short periods of time, do not operate the server without the cover in place. The chassis cover must be in place to allow proper airflow and prevent overheating.

Figure 2-7: Removing the Chassis Cover

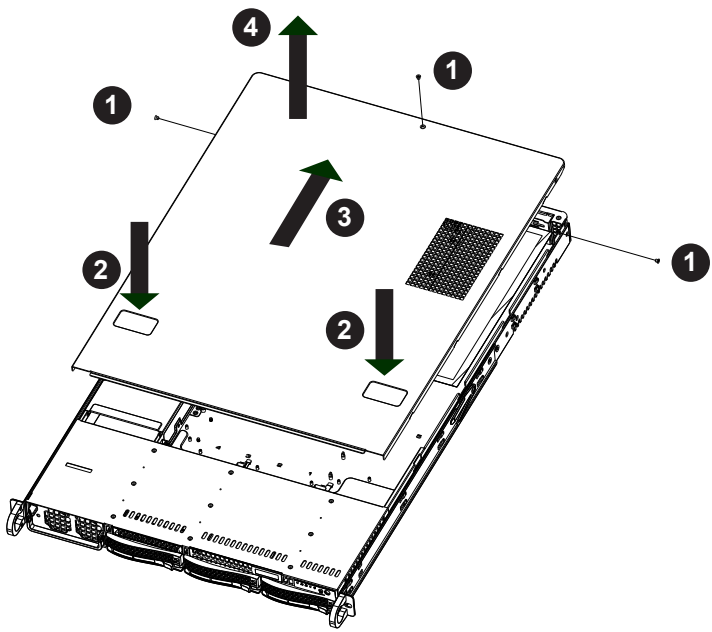

Checking the Components

- You may have processors already installed to the serverboard. Each processor needs its own heatsink. See Chapter 5 for instructions on processor and heatsink installation.
- Your server system may have come with system memory already installed. Make sure all DIMMs are fully seated in their slots. For details on adding system memory, refer to Chapter 5.
- If desired, you can install add-on cards to the system. See Chapter 5 for details on installing PCI add-on cards.
- Make sure all power and data cables are properly connected and not blocking the chassis airflow. See Chapter 5 for details on cable connections. Also, check the air seals for damage. The air seals are located under the blower fan and beneath the frame cross section that separates the drive bay area from the serverboard area of the chassis.

2-7 Checking the Drive Bay Setup

Next, you should check to make sure the hard drives have been properly installed and all connections have been made.

Checking the Drives

- You can add or remove hard drives from the drive carriers without having to remove the top chassis cover.
- If you need to remove or install hard drives, please refer to Chapter 6.

Checking the Airflow

- Airflow is provided by 4-cm counter-rotating fans. The system component layout was carefully designed to direct sufficient cooling airflow to the components that generate the most heat.
- Note that all power and data cables have been routed in such a way that they do not block the airflow generated by the fans.

Providing Power

The last thing you must do is to provide input power to the system.

1. Plug the power cord from the power supply unit into a high-quality power strip that offers protection from electrical noise and power surges. It is recommended that you use an uninterruptible power supply (UPS).
2. Finish by depressing the power button on the chassis control panel.

Chapter 3

System Interface

3-1 Overview

The chassis features a control panel on the front with power control buttons and system status LEDs. Each drive carrier also has LEDs that indicate the status of the hard disk drive in that bay. Descriptions follow.

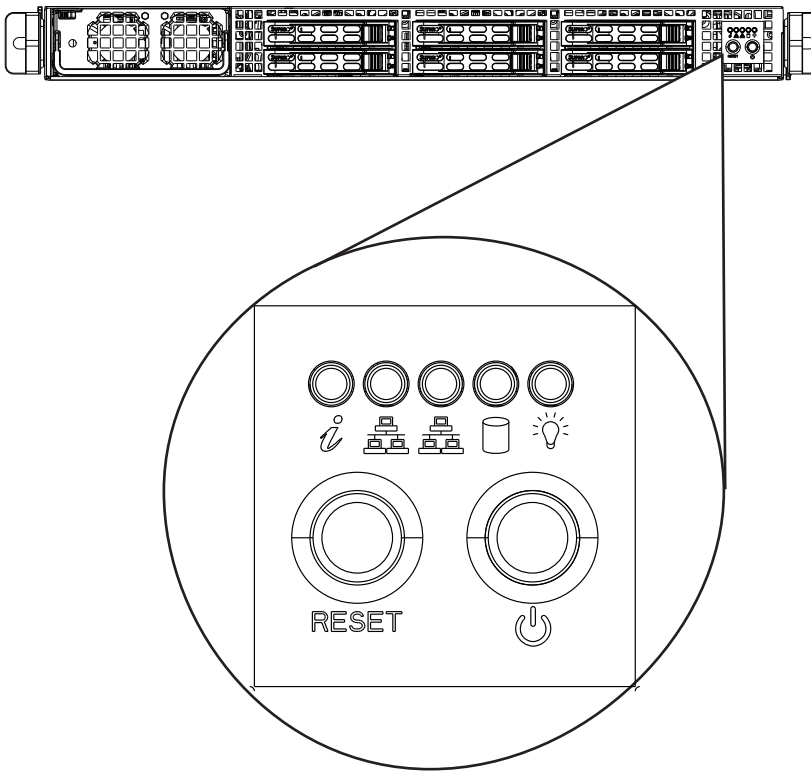

Figure 3-1. Control Panel

3-2 Control Panel Buttons

There are two power control push-buttons on the front of the chassis.



Reset

Use the reset button to reboot the system.



Power

The main power button is used to apply or remove power from the power supply to the server system. Turning off system power with this button removes the main power but keeps standby power supplied to the system.

3-3 Control Panel LEDs

The control panel displays five LEDs that indicate the status of the system.



Information LED

Alerts operator of several states, as noted in the table below.

Information LED	
Status	**Description**
Continuously on and red	An overheat condition has occured. (This may be caused by cable congestion.)
Blinking red (1Hz)	Fan failure, check for an inoperative fan.
Blinking red (0.25Hz)	Power failure, check for a non-operational power supply.
Solid blue	Local UID has been activated. Use this function to locate the server in a rack mount environment.
Blinking blue	Remote UID is on. Use this function to identify the server from a remote location.



NIC2

Indicates network activity on LAN2 when flashing .



NIC1

Indicates network activity on LAN1 when flashing .



HDD

This light indicates SATA and/or DVD-ROM drive activity when flashing.



Power

Indicates power is being supplied to the system's power supply units. This LED should normally be illuminated when the system is operating.

3-4 SATA Drive Carrier LEDs

- **Green:** Each Serial ATA drive carrier has a green LED. When illuminated, this green LED (on the front of the SATA drive carrier) indicates drive activity. A connection to the SATA backplane enables this LED to blink on and off when that particular drive is being accessed. Please refer to Chapter 6 for instructions on replacing failed SATA drives.

- **Red:** The red LED to indicate an SATA drive failure. If one of the SATA drives fail, you should be notified by your system management software. Please refer to Chapter 6 for instructions on replacing failed SATA drives.

Notes

Chapter 4

Standardized Warning Statements for AC Systems

4-1 About Standardized Warning Statements

The following statements are industry standard warnings, provided to warn the user of situations which have the potential for bodily injury. Should you have questions or experience difficulty, contact Supermicro's Technical Support department for assistance. Only certified technicians should attempt to install or configure components.

Read this appendix in its entirety before installing or configuring components in the Supermicro chassis.

These warnings may also be found on our web site at http://www.supermicro.com/about/policies/safety_information.cfm.

Warning Definition



Warning!

This warning symbol means danger. You are in a situation that could cause bodily injury. Before you work on any equipment, be aware of the hazards involved with electrical circuitry and be familiar with standard practices for preventing accidents.

警告の定義

この警告サインは危険を意味します。

人身事故につながる可能性がありますので、いずれの機器でも動作させる前に、

電気回路に含まれる危険性に注意して、標準的な事故防止策に精通して下さい。

此警告符号代表危险。

您正处于可能受到严重伤害的工作环境中。在您使用设备开始工作之前，必须充分意识到触电的危险，并熟练掌握防止事故发生的标准工作程序。请根据每项警告结尾的声明号码找到此设备的安全性警告说明的翻译文本。

此警告符號代表危險。

您正處於可能身體可能會受損傷的工作環境中。在您使用任何設備之前，請注意觸電的危險，並且要熟悉預防事故發生的標準工作程序。請依照每一注意事項後的號碼找到相關的翻譯說明內容。

Warnung

WICHTIGE SICHERHEITSHINWEISE

Dieses Warnsymbol bedeutet Gefahr. Sie befinden sich in einer Situation, die zu Verletzungen führen kann. Machen Sie sich vor der Arbeit mit Geräten mit den Gefahren elektrischer Schaltungen und den üblichen Verfahren zur Vorbeugung vor Unfällen vertraut. Suchen Sie mit der am Ende jeder Warnung angegebenen Anweisungsnummer nach der jeweiligen Übersetzung in den übersetzten Sicherheitshinweisen, die zusammen mit diesem Gerät ausgeliefert wurden.

BEWAHREN SIE DIESE HINWEISE GUT AUF.

INSTRUCCIONES IMPORTANTES DE SEGURIDAD

Este símbolo de aviso indica peligro. Existe riesgo para su integridad física. Antes de manipular cualquier equipo, considere los riesgos de la corriente eléctrica y familiarícese con los procedimientos estándar de prevención de accidentes. Al final de cada advertencia encontrará el número que le ayudará a encontrar el texto traducido en el apartado de traducciones que acompaña a este dispositivo.

GUARDE ESTAS INSTRUCCIONES.

IMPORTANTES INFORMATIONS DE SÉCURITÉ

Ce symbole d'avertissement indique un danger. Vous vous trouvez dans une situation pouvant entraîner des blessures ou des dommages corporels. Avant de travailler sur un équipement, soyez conscient des dangers liés aux circuits électriques et familiarisez-vous avec les procédures couramment utilisées pour éviter les accidents. Pour prendre connaissance des traductions des avertissements figurant dans les consignes de sécurité traduites qui accompagnent cet appareil, référez-vous au numéro de l'instruction situé à la fin de chaque avertissement.

CONSERVEZ CES INFORMATIONS.

תקנון הצהרות אזהרה

הצהרות הבאות הן אזהרות על פי תקני התעשייה, על מנת להזהיר את המשתמש מפני חבלה פיזית אפשרית. במידה ויש שאלות או היתקלות בבעיה כלשהי, יש ליצור קשר עם מחלקת תמיכה טכנית של סופרמיקרו. טכנאים מוסמכים בלבד רשאים להתקין או להגדיר את הרכיבים.

יש לקרוא את הנספח במלואו לפני התקנת או הגדרת הרכיבים במארזי סופרמיקרו.

تحذير! هذا الرمز يعني خطر انك في حالة يمكن أن تتسبب في اصابة جسدية .
قبل أن تعمل على أي معدات،كن على علم بالمخاطر الناجمة عن الدوائر
الكهربائية
وكن على دراية بالممارسات الوقائية لمنع وقوع أي حوادث
استخدم رقم البيان المنصوص في نهاية كل تحذير للعثور ترجمتها

안전을 위한 주의사항

경고!

이 경고 기호는 위험이 있음을 알려 줍니다. 작업자의 신체에 부상을 야기 할 수 있는 상태에 있게 됩니다. 모든 장비에 대한 작업을 수행하기 전에 전기회로와 관련된 위험요소들을 확인하시고 사전에 사고를 방지할 수 있도록 표준 작업절차를 준수해 주시기 바랍니다.

해당 번역문을 찾기 위해 각 경고의 마지막 부분에 제공된 경고문 번호를 참조하십시오

BELANGRIJKE VEILIGHEIDSINSTRUCTIES

Dit waarschuwings symbool betekent gevaar. U verkeert in een situatie die lichamelijk letsel kan veroorzaken. Voordat u aan enige apparatuur gaat werken, dient u zich bewust te zijn van de bij een elektrische installatie betrokken risico's en dient u op de hoogte te zijn van de standaard procedures om ongelukken te voorkomen. Gebruik de nummers aan het eind van elke waarschuwing om deze te herleiden naar de desbetreffende locatie.

BEWAAR DEZE INSTRUCTIES

Installation Instructions



Warning!

Read the installation instructions before connecting the system to the power source.

設置手順書

システムを電源に接続する前に、設置手順書をお読み下さい。

警告
将此系统连接电源前,请先阅读安装说明。

警告
將系統與電源連接前，請先閱讀安裝說明。

Warnung

Vor dem Anschließen des Systems an die Stromquelle die Installationsanweisungen lesen.

¡Advertencia!

Lea las instrucciones de instalación antes de conectar el sistema a la red de alimentación.

Attention

Avant de brancher le système sur la source d'alimentation, consulter les directives d'installation.

יש לקרוא את הוראות התקנה לפני חיבור המערכת למקור מתח.

اقر إرشادات التركيب قبل توصيل النظام إلى مصدر للطاقة

시스템을 전원에 연결하기 전에 설치 안내를 읽어주십시오.

Waarschuwing

Raadpleeg de installatie-instructies voordat u het systeem op de voedingsbron aansluit.

Circuit Breaker



Warning!

This product relies on the building's installation for short-circuit (overcurrent) protection. Ensure that the protective device is rated not greater than: 250 V, 20 A.

サーキット・ブレーカー

この製品は、短絡(過電流)保護装置がある建物での設置を前提としています。

保護装置の定格が250 V、20 Aを超えないことを確認下さい。

警告

此产品的短路(过载电流)保护由建筑物的供电系统提供,确保短路保护设备的额定电流不大于250V,20A。

警告

此產品的短路(過載電流)保護由建築物的供電系統提供,確保短路保護設備的額定電流不大於250V,20A。

Warnung

Dieses Produkt ist darauf angewiesen, dass im Gebäude ein Kurzschluss- bzw. Überstromschutz installiert ist. Stellen Sie sicher, dass der Nennwert der Schutzvorrichtung nicht mehr als: 250 V, 20 A beträgt.

¡Advertencia!

Este equipo utiliza el sistema de protección contra cortocircuitos (o sobrecorrientes) del edificio. Asegúrese de que el dispositivo de protección no sea superior a: 250 V, 20 A.

Attention

Pour ce qui est de la protection contre les courts-circuits (surtension), ce produit dépend de l'installation électrique du local. Vérifiez que le courant nominal du dispositif de protection n'est pas supérieur à :250 V, 20 A.

מוצר זה מסתמך על הגנה המותקנת במבנים למניעת קצר חשמלי. יש לוודא כי המכשיר המגן מפני הקצר החשמלי הוא לא יותר מ-250 V, 20 A

هذا المنتج يعتمد على معدات الحماية من الدوائر القصيرة التي تم تثبيتها في المبنى

تأكد من أن تقييم الجهاز الوقائي ليس أكثر من: 20A, 250V

경고!

이 제품은 전원의 단락(과전류)방지에 대해서 전적으로 건물의 관련 설비에 의존합니다. 보호장치의 정격이 반드시 250V(볼트), 20A(암페어)를 초과하지 않도록 해야 합니다.

Waarschuwing

Dit product is afhankelijk van de kortsluitbeveiliging (overspanning) van uw electrische installatie. Controleer of het beveiligde aparaat niet groter gedimensioneerd is dan 220V, 20A.

Power Disconnection Warning



Warning!

The system must be disconnected from all sources of power and the power cord removed from the power supply module(s) before accessing the chassis interior to install or remove system components.

電源切断の警告

システムコンポーネントの取り付けまたは取り外しのために、シャーシー内部にアクセスするには、

システムの電源はすべてのソースから切断され、電源コードは電源モジュールから取り外す必要があります。

警告

在你打开机箱并安装或移除内部器件前,必须将系统完全断电,并移除电源线。

警告

在您打開機殼安裝或移除內部元件前，必須將系統完全斷電，並移除電源線。

Warnung

Das System muss von allen Quellen der Energie und vom Netzanschlusskabel getrennt sein, das von den Spg.Versorgungsteilmodulen entfernt wird, bevor es auf den Chassisinnenraum zurückgreift, um Systemsbestandteile anzubringen oder zu entfernen.

¡Advertencia!

El sistema debe ser disconnected de todas las fuentes de energía y del cable eléctrico quitado de los módulos de fuente de alimentación antes de tener acceso el interior del chasis para instalar o para quitar componentes de sistema.

Attention

Le système doit être débranché de toutes les sources de puissance ainsi que de son cordon d'alimentation secteur avant d'accéder à l'intérieur du chassis pour installer ou enlever des composants de systéme.

אזהרה !

יש לנתק את המערכת מכל מקורות החשמל ויש להסיר את כבל החשמלי מהספק לפני גישה לחלק הפנימי של המארז לצורך התקנת או הסרת רכיבים.

يجب فصل النظام من جميع مصادر الطاقة وإزالة سلك الكهرباء من وحدة امداد الطاقة قبل
الوصول إلى المناطق الداخلية للهيكل لتثبيت أو إزالة مكونات الجهاز

경고!

시스템에 부품들을 장착하거나 제거하기 위해서는 섀시 내부에 접근하기 전에 반드시 전원 공급장치로부터 연결되어있는 모든 전원과 전기코드를 분리해주어야 합니다.

Waarschuwing

Voordat u toegang neemt tot het binnenwerk van de behuizing voor het installeren of verwijderen van systeem onderdelen, dient u alle spanningsbronnen en alle stroomkabels aangesloten op de voeding(en) van de behuizing te verwijderen

Equipment Installation



Warning!

Only trained and qualified personnel should be allowed to install, replace, or service this equipment.

機器の設置

トレーニングを受け認定された人だけがこの装置の設置、交換、またはサービスを許可されています。

警告

只有经过培训且具有资格的人员才能进行此设备的安装、更换和维修。

警告

只有經過受訓且具資格人員才可安裝、更換與維修此設備。

Warnung

Das Installieren, Ersetzen oder Bedienen dieser Ausrüstung sollte nur geschultem, qualifiziertem Personal gestattet werden.

¡Advertencia!

Solamente el personal calificado debe instalar, reemplazar o utilizar este equipo.

Attention

Il est vivement recommandé de confier l'installation, le remplacement et la maintenance de ces équipements à des personnels qualifiés et expérimentés.

אזהרה !

צוות מוסמך בלבד רשאי להתקין, להחליף את הציוד או לתת שירות עבור הציוד.

يجب أن يسمح فقط للموظفين المؤهلين والمدربين لتركيب واستبدال أو خدمة هذا الجهاز

경고!

훈련을 받고 공인된 기술자만이 이 장비의 설치, 교체 또는 서비스를 수행할 수 있습니다.

Waarschuwing

Deze apparatuur mag alleen worden geïnstalleerd, vervangen of hersteld door geschoold en gekwalificeerd personeel.

Restricted Area



Warning!

This unit is intended for installation in restricted access areas. A restricted access area can be accessed only through the use of a special tool, lock and key, or other means of security. (This warning does not apply to workstations).

アクセス制限区域

このユニットは、アクセス制限区域に設置されることを想定しています。

アクセス制限区域は、特別なツール、鍵と錠前、その他のセキュリティの手段を用いてのみ出入りが可能です。

警告

此部件应安装在限制进出的场所，限制进出的场所指只能通过使用特殊工具、锁和钥匙或其它安全手段进出的场所。

警告

此裝置僅限安裝於進出管制區域，進出管制區域係指僅能以特殊工具、鎖頭及鑰匙或其他安全方式才能進入的區域。

Warnung

Diese Einheit ist zur Installation in Bereichen mit beschränktem Zutritt vorgesehen. Der Zutritt zu derartigen Bereichen ist nur mit einem Spezialwerkzeug, Schloss und Schlüssel oder einer sonstigen Sicherheitsvorkehrung möglich.

¡Advertencia!

Esta unidad ha sido diseñada para instalación en áreas de acceso restringido. Sólo puede obtenerse acceso a una de estas áreas mediante la utilización de una herramienta especial, cerradura con llave u otro medio de seguridad.

Attention

Cet appareil doit être installée dans des zones d'accès réservés. L'accès à une zone d'accès réservé n'est possible qu'en utilisant un outil spécial, un mécanisme de verrouillage et une clé, ou tout autre moyen de sécurité.

אזור עם גישה מוגבלת

אזהרה !
יש להתקין את היחידה באזורים שיש בהם הגבלת גישה. הגישה ניתנת בעזרת כלי אבטחה בלבד (מפתח, מנעול וכד׳).

تم تخصيص هذه الوحدة لتركيبها في مناطق محظورة .
يمكن الوصول إلى منطقة محظورة فقط من خلال استخدام أداة خاصة،
قفل ومفتاح أو أي وسيلة أخرى للالأمان

경고!

이 장치는 접근이 제한된 구역에 설치하도록 되어있습니다. 특수도구, 잠금 장치 및 키, 또는 기타 보안 수단을 통해서만 접근 제한 구역에 들어갈 수 있습니다.

Waarschuwing

Dit apparaat is bedoeld voor installatie in gebieden met een beperkte toegang. Toegang tot dergelijke gebieden kunnen alleen verkregen worden door gebruik te maken van speciaal gereedschap, slot en sleutel of andere veiligheidsmaatregelen.

Battery Handling



Warning!

There is the danger of explosion if the battery is replaced incorrectly. Replace the battery only with the same or equivalent type recommended by the manufacturer. Dispose of used batteries according to the manufacturer's instructions

電池の取り扱い

電池交換が正しく行われなかった場合、破裂の危険性があります。交換する電池はメーカーが推奨する型、または同等のものを使用下さい。使用済電池は製造元の指示に従って処分して下さい。

警告
电池更换不当会有爆炸危险。请只使用同类电池或制造商推荐的功能相当的电池更换原有电池。请按制造商的说明处理废旧电池。

警告
電池更換不當會有爆炸危險。請使用製造商建議之相同或功能相當的電池更換原有電池。請按照製造商的說明指示處理廢棄舊電池。

Warnung

Bei Einsetzen einer falschen Batterie besteht Explosionsgefahr. Ersetzen Sie die Batterie nur durch den gleichen oder vom Hersteller empfohlenen Batterietyp. Entsorgen Sie die benutzten Batterien nach den Anweisungen des Herstellers.

Attention

Danger d'explosion si la pile n'est pas remplacée correctement. Ne la remplacer que par une pile de type semblable ou équivalent, recommandée par le fabricant. Jeter les piles usagées conformément aux instructions du fabricant.

¡Advertencia!

Existe peligro de explosión si la batería se reemplaza de manera incorrecta. Reemplazar la batería exclusivamente con el mismo tipo o el equivalente recomendado por el fabricante. Desechar las baterías gastadas según las instrucciones del fabricante.

אזהרה !
קיימת סכנת פיצוץ של הסוללה במידה והוחלפה בדרך לא תקינה. יש להחליף את הסוללה בסוג התואם מחברת יצרן מומלצת.

סילוק הסוללות המשומשות יש לבצע לפי הוראות היצרן.

هناك خطر من انفجار في حالة استبدال البطارية بطريقة غير صحيحة فعليك استبدال البطارية
فقط بنفس النوع أو ما يعادلها كما أوصت به الشركة المصنعة
تخلص من البطاريات المستعملة وفقا لتعليمات الشركة الصانعة

경고!

배터리가 올바르게 교체되지 않으면 폭발의 위험이 있습니다. 기존 배터리와 동일하거나 제조사에서 권장하는 동등한 종류의 배터리로만 교체해야 합니다. 제조사의 안내에 따라 사용된 배터리를 처리하여 주십시오.

Waarschuwing

Er is ontploffingsgevaar indien de batterij verkeerd vervangen wordt. Vervang de batterij slechts met hetzelfde of een equivalent type die door de fabrikant aanbevolen wordt. Gebruikte batterijen dienen overeenkomstig fabrieksvoorschriften afgevoerd te worden.

Redundant Power Supplies



Warning!

This unit might have more than one power supply connection. All connections must be removed to de-energize the unit.

冗長電源装置
このユニットは複数の電源装置が接続されている場合があります。
ユニットの電源を切るためには、すべての接続を取り外さなければなりません。

警告
此部件连接的电源可能不止一个，必须将所有电源断开才能停止给该部件供电。

警告
此裝置連接的電源可能不只一個，必須切斷所有電源才能停止對該裝置的供電。

Warnung

Dieses Gerät kann mehr als eine Stromzufuhr haben. Um sicherzustellen, dass der Einheit kein trom zugeführt wird, müssen alle Verbindungen entfernt werden.

¡Advertencia!

Puede que esta unidad tenga más de una conexión para fuentes de alimentación. Para cortar por completo el suministro de energía, deben desconectarse todas las conexiones.

Attention

Cette unité peut avoir plus d'une connexion d'alimentation. Pour supprimer toute tension et tout courant électrique de l'unité, toutes les connexions d'alimentation doivent être débranchées.

אם קיים יותר מספק אחד

אזהרה !
ליחדה יש יותר מחיבור אחד של ספק. יש להסיר את כל החיבורים על מנת לרוקן את היחידה.

قد يكون لهذا الجهاز عدة اتصالات بوحدات امداد الطاقة.
يجب إزالة كافة الاتصالات لعزل الوحدة عن الكهرباء

경고!

이 장치에는 한 개 이상의 전원 공급 단자가 연결되어 있을 수 있습니다. 이 장치에 전원을 차단하기 위해서는 모든 연결 단자를 제거해야만 합니다.

Waarschuwing

Deze eenheid kan meer dan één stroomtoevoeraansluiting bevatten. Alle aansluitingen dienen verwijderd te worden om het apparaat stroomloos te maken.

Backplane Voltage



Warning!

Hazardous voltage or energy is present on the backplane when the system is operating. Use caution when servicing.

バックプレーンの電圧

システムの稼働中は危険な電圧または電力が、バックプレーン上にかかっています。

修理する際には注意ください。

警告

当系统正在进行时，背板上有很危险的电压或能量，进行维修时务必小心。

警告

當系統正在進行時，背板上有危險的電壓或能量，進行維修時務必小心。

Warnung

Wenn das System in Betrieb ist, treten auf der Rückwandplatine gefährliche Spannungen oder Energien auf. Vorsicht bei der Wartung.

¡Advertencia!

Cuando el sistema está en funcionamiento, el voltaje del plano trasero es peligroso. Tenga cuidado cuando lo revise.

Attention

Lorsque le système est en fonctionnement, des tensions électriques circulent sur le fond de panier. Prendre des précautions lors de la maintenance.

מתח בפנל האחורי

אזהרה !
קיימת סכנת מתח בפנל האחורי בזמן תפעול המערכת. יש להיזהר במהלך העבודה.

هناك خطر من التيار الكهربائي أوالطاقة الموجودة على اللوحة
عندما يكون النظام يعمل كن حذرا عند خدمة هذا الجهاز

경고!

시스템이 동작 중일 때 후면판 (Backplane)에는 위험한 전압이나 에너지가 발생합니다. 서비스 작업 시 주의하십시오.

Waarschuwing

Een gevaarlijke spanning of energie is aanwezig op de backplane wanneer het systeem in gebruik is. Voorzichtigheid is geboden tijdens het onderhoud.

Comply with Local and National Electrical Codes



Warning!

Installation of the equipment must comply with local and national electrical codes.

地方および国の電気規格に準拠
機器の取り付けはその地方および国の電気規格に準拠する必要があります。

警告

设备安装必须符合本地与本国电气法规。

警告

設備安裝必須符合本地與本國電氣法規。

Warnung

Die Installation der Geräte muss den Sicherheitsstandards entsprechen.

¡Advertencia!

La instalacion del equipo debe cumplir con las normas de electricidad locales y nacionales.

Attention

L'équipement doit être installé conformément aux normes électriques nationales et locales.

תיאום חוקי החשמל הארצי

אזהרה !
התקנת הציוד חייבת להיות תואמת לחוקי החשמל המקומיים והארציים.

تركيب المعدات الكهربائية يجب أن يمتثل للقوانين المحلية والوطنية المتعلقة بالكهرباء

경고!

현 지역 및 국가의 전기 규정에 따라 장비를 설치해야 합니다.

Waarschuwing

Bij installatie van de apparatuur moet worden voldaan aan de lokale en nationale elektriciteitsvoorschriften.

Product Disposal



Warning!

Ultimate disposal of this product should be handled according to all national laws and regulations.

製品の廃棄

この製品を廃棄処分する場合、国の関係する全ての法律・条例に従い処理する必要があります。

警告
本产品的废弃处理应根据所有国家的法律和规章进行。

警告
本產品的廢棄處理應根據所有國家的法律和規章進行。

Warnung

Die Entsorgung dieses Produkts sollte gemäß allen Bestimmungen und Gesetzen des Landes erfolgen.

¡Advertencia!

Al deshacerse por completo de este producto debe seguir todas las leyes y reglamentos nacionales.

Attention

La mise au rebut ou le recyclage de ce produit sont généralement soumis à des lois et/ou directives de respect de l'environnement. Renseignez-vous auprès de l'organisme compétent.

סילוק המוצר

אזהרה !
סילוק סופי של מוצר זה חייב להיות בהתאם להנחיות וחוקי המדינה.

عند التخلص النهائي من هذا المنتج ينبغي التعامل معه وفقا لجميع القوانين واللوائح الوطنية

경고!

이 제품은 해당 국가의 관련 법규 및 규정에 따라 폐기되어야 합니다.

Waarschuwing

De uiteindelijke verwijdering van dit product dient te geschieden in overeenstemming met alle nationale wetten en reglementen.

Hot Swap Fan Warning



Warning!

The fans might still be turning when you remove the fan assembly from the chassis. Keep fingers, screwdrivers, and other objects away from the openings in the fan assembly's housing.

ファン・ホットスワップの警告

シャーシから冷却ファン装置を取り外した際、ファンがまだ回転している可能性があります。ファンの開口部に、指、ドライバー、およびその他のものを近づけないで下さい。

警告
当您从机架移除风扇装置，风扇可能仍在转动。小心不要将手指、螺丝起子和其他物品太靠近风扇

警告
當您從機架移除風扇裝置，風扇可能仍在轉動。小心不要將手指、螺絲起子和其他物品太靠近風扇。

Warnung

Die Lüfter drehen sich u. U. noch, wenn die Lüfterbaugruppe aus dem Chassis genommen wird. Halten Sie Finger, Schraubendreher und andere Gegenstände von den Öffnungen des Lüftergehäuses entfernt.

¡Advertencia!

Los ventiladores podran dar vuelta cuando usted quite ell montaje del ventilador del chasis. Mandtenga los dedos, los destornilladores y todos los objetos lejos de las aberturas del ventilador

Attention

Il est possible que les ventilateurs soient toujours en rotation lorsque vous retirerez le bloc ventilateur du châssis. Prenez garde à ce que doigts, tournevis et autres objets soient éloignés du logement du bloc ventilateur.

אזהרה !
כאשר מסירים את חלקי המאוורר מהמארז, יתכן והמאוררים עדיין עובדים. יש להרחיק למרחק בטוח את האצבעות וכלי עבודה שונים מהפתחים בתוך המאוורר

من الممكن أن المراوح لا تزال تدور عند إزالة كتلة المروحة من الهيكل يجب إبقاء الأصابع ومفكات البراغي
وغيرها من الأشياء بعيدا عن الفتحات في كتلة المروحة.

경고!

섀시로부터 팬 조립품을 제거할 때 팬은 여전히 회전하고 있을 수 있습니다. 팬 조림품 외관의 열려있는 부분들로부터 손가락 및 스크류드라이버, 다른 물체들이 가까이 하지 않도록 배치해 주십시오.

Waarschuwing

Het is mogelijk dat de ventilator nog draait tijdens het verwijderen van het ventilatorsamenstel uit het chassis. Houd uw vingers, schroevendraaiers en eventuele andere voorwerpen uit de buurt van de openingen in de ventilatorbehuizing.

Power Cable and AC Adapter



Warning!

When installing the product, use the provided or designated connection cables, power cables and AC adaptors. Using any other cables and adaptors could cause a malfunction or a fire. Electrical Appliance and Material Safety Law prohibits the use of UL or CSA -certified cables (that have UL/CSA shown on the code) for any other electrical devices than products designated by Supermicro only.

電源コードとACアダプター

製品を設置する場合、提供または指定された接続ケーブル、電源コードとACアダプターを使用下さい。他のケーブルやアダプタを使用すると故障や火災の原因になることがあります。電気用品安全法は、ULまたはCSA認定のケーブル(UL/CSEマークがコードに表記)を Supermicroが指定する製品以外に使用することを禁止しています。

警告

安装此产品时,请使用本身提供的或指定的连接线,电源线和电源适配器.使用其它线材或适配器可能会引起故障或火灾。除了Supermicro所指定的产品,电气用品和材料安全法律规定禁止使用未经UL或CSA认证的线材。(线材上会显示UL/CSA符号)。

警告

安裝此產品時,請使用本身提供的或指定的連接線,電源線和電源適配器.使用其它線材或適配器可能會引起故障或火災。除了Supermicro所指定的產品,電氣用品和材料安全法律規定禁止使用未經UL或CSA認證的線材。(線材上會顯示UL/CSA符號)。

Warnung

Bei der Installation des Produkts, die zur Verfügung gestellten oder benannt Anschlusskabel, Stromkabel und Netzteile. Verwendung anderer Kabel und Adapter kann zu einer Fehlfunktion oder ein Brand entstehen. Elektrische Geräte und Material Safety Law verbietet die Verwendung von UL-oder CSA-zertifizierte Kabel, UL oder CSA auf der Code für alle anderen elektrischen Geräte als Produkte von Supermicro nur bezeichnet gezeigt haben.

¡Advertencia!

Al instalar el producto, utilice los cables de conexión previstos o designados, los cables y adaptadores de CA. La utilización de otros cables y adaptadores podría ocasionar un mal funcionamiento o un incendio. Aparatos Eléctricos y la Ley de Seguridad del Material prohíbe el uso de UL o CSA cables certificados que tienen UL o CSA se muestra en el código de otros dispositivos eléctricos que los productos designados por Supermicro solamente.

Attention

Lors de l'installation du produit, utilisez les bables de connection fournis ou désigné. L'utilisation d'autres cables et adaptateurs peut provoquer un dysfonctionnement ou un incendie. Appareils électroménagers et de loi sur la sécurité Matériel interdit l'utilisation de UL ou CSA câbles certifiés qui ont UL ou CSA indiqué sur le code pour tous les autres appareils électriques que les produits désignés par Supermicro seulement.

חשמליים ומתאמי AC

אזהרה !

כאשר מתקינים את המוצר, יש להשתמש בכבלים, ספקים ומתאמים AC אשר נועדו וסופקו לשם כך. שימוש בכל כבל או מתאם אחר יכול לגרום לתקלה או קצר חשמלי. על פי חוקי שימוש במכשירי חשמל וחוקי בטיחות, קיים איסור להשתמש בכבלים המוסמכים ב- UL או ב- CSA (כשאר מופיע עליהם קוד של UL/CSA) עבור כל מוצר חשמלי אחר שלא צוין על ידי סופרמיקרו בלבד.

عند تركيب الجهاز يجب استخدام كابلات التوصيل،والكابلات الكهربائية ومحولات التيار المتردد
التي . أن استخدام أي كابلات ومحولات أخرى يتسبب في حدوث عطل أو حريق.
تم توفيرها لك مع المنتج
الأجهزة الكهربائية ومواد قانون السلامة يحظر استخدام الكابلات CSA أو UL معتمدة من قبل
لأي أجهزة كهربائية أخرى غير المنتجات المعينة من قبل Supermicro
(التي تحمل علامة UL/CSA)

경고!

제품을 설치할 때에는 제공되거나 지정된 연결케이블과 전원케이블, AC어댑터를 사용해야 합니다. 그 밖의 다른 케이블들이나 어댑터들은 고장 또는 화재의 원인이 될 수 있습니다. 전기용품안전법 (Electrical Appliance and Material Safety Law)은 슈퍼마이크로에서 지정한 제품들 외에는 그 밖의 다른 전기 장치들을 위한 UL또는 CSA에서 인증한 케이블(전선 위에 UL/CSA가 표시)들의 사용을 금지합니다.

Waarschuwing

Bij het installeren van het product, gebruik de meegeleverde of aangewezen kabels, stroomkabels en adapters. Het gebruik van andere kabels en adapters kan leiden tot een storing of een brand. Elektrisch apparaat en veiligheidsinformatiebladen wet verbiedt het gebruik van UL of CSA gecertificeerde kabels die UL of CSA die op de code voor andere elektrische apparaten dan de producten die door Supermicro alleen.

Notes

Chapter 5

Advanced Serverboard Setup

This chapter covers installation and maintenance procedures for the H8DGG-QF serverboard. Serverboard jumpers and connections are also described. A layout and quick reference chart are included in this chapter for your reference.

5-1 Handling the Serverboard

Electrostatic Discharge (ESD) can damage electronic components. To prevent damage to any printed circuit boards (PCBs), it is important to handle them very carefully (see previous chapter). To prevent the H8DGG-QF serverboard from bending, keep one hand under the center of the board to support it when handling. The following measures are generally sufficient to protect your equipment from electric static discharge.

Precautions

- Use a grounded wrist strap designed to prevent Electrostatic Discharge (ESD).
- Touch a grounded metal object before removing any board from its antistatic bag.
- Handle a board by its edges only; do not touch its components, peripheral chips, memory modules or gold contacts.
- When handling chips or modules, avoid touching their pins.
- Put the serverboard, add-on cards and peripherals back into their antistatic bags when not in use.
- For grounding purposes, make sure your computer chassis provides excellent conductivity between the power supply, the case, the mounting fasteners and the serverboard.

Unpacking

The serverboard is shipped in antistatic packaging to avoid electrostatic discharge. When unpacking the board, make sure the person handling it is static protected.

5-2 I/O Ports and Control Panel Connections

The I/O ports are color coded in conformance with the PC 99 specification. See Figure 5-1 below for the colors and locations of the various I/O ports.

Figure 5-1. I/O Ports

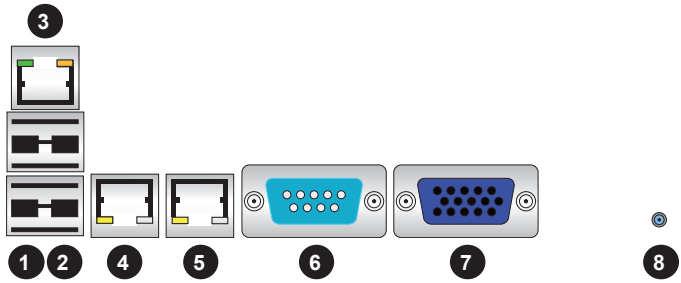

Rear I/O Ports			
1. USB0	3. IPMI LAN	5. LAN2	7. VGA Port
2. USB1	4. LAN1	6. COM1	8. UID

Front Control Panel

JF1 contains header pins for various front control panel connectors. See Figure 5-2 for the pin definitions of the various connectors. Refer to Section 5-7 for details.

Figure 5-2. JF1: Front Control Panel Header (JF1)

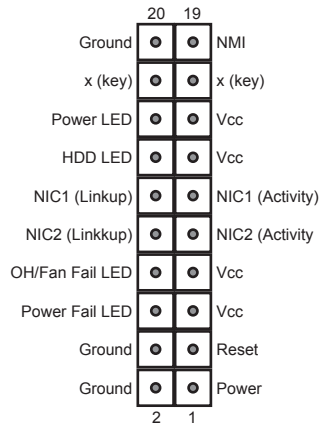

5-3 Processor and Heatsink Installation

When handling the processor, avoid touching the gold contacts. Also, do not place the serverboard on a conductive surface, which can damage the BIOS battery and prevent the system from booting up.

Notes:

- Always connect the power cord last and always remove it before adding, removing or changing any hardware components. Make sure that you install the processor into the CPU socket before you install the CPU heatsink.
- If you buy a CPU separately, make sure that you use an AMD-certified multi-directional heatsink only.
- Make sure to install the serverboard into the chassis before you install the CPU heatsinks.
- When receiving a serverboard without a processor pre-installed, make sure that the plastic CPU socket cap is in place and none of the socket pins are bent; otherwise, contact your retailer immediately.
- Refer to the Supermicro web site for updates on CPU support.

Installing the Processors

1. Begin by removing the cover plate that protects the CPU. Lift the lever on the CPU socket until it points straight up.



2. With the lever raised, lift open the silver CPU retention plate.

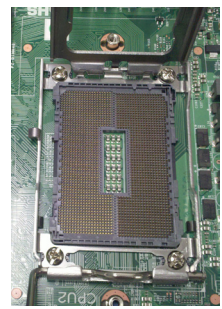

3. Use your thumb and your index finger to hold the CPU. Locate and align pin 1 of the CPU socket with pin 1 of the CPU. Both are marked with a triangle.



4. Align pin 1 of the CPU with pin 1 of the socket. Once aligned, carefully place the CPU into the socket. *Do not drop the CPU on the socket, move the CPU horizontally or vertically or rub the CPU against the socket or against any pins of the socket, which may damage the CPU and/or the socket*.

5. With the CPU inserted into the socket, inspect the four corners of the CPU to make sure that it is properly installed and flush with the socket. Then, gently lower the silver CPU retention plate into place.



6. Carefully press the CPU socket lever down until it locks into its retention tab. For a dual-CPU system, repeat these steps to install another CPU into the CPU#2 socket (and into CPU#2, #3 and #4 sockets for a quad-CPU configuration).



Note: In single and dual-CPU configurations, memory must be installed in the DIMM slots associated with the installed CPU(s).

Note: See Chapter 6 for details on installing the air shroud.

Installing a Passive CPU Heatsink

1. Do not apply any thermal grease to the heatsink or the CPU die -- the required amount has already been applied.
2. Place the heatsink directly on top of the CPU so that the heat sink screws are aligned with the mounting holes on the back plate.
3. Make sure the screwdriver torgue setting is no more than 5.0 Kgf-cm (4.3 lbf-in) and keep the heat sink direction vertical.
4. Tighten each screw a few turns at a time while alternating between the two until fully tightened.

Figure 5-3. SNK-0042P Heatsink

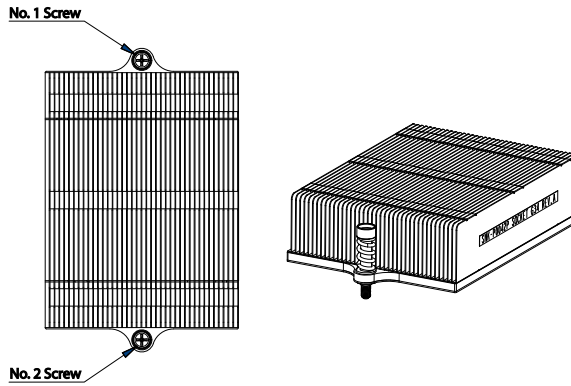

Removing the Heatsink

Warning: We do not recommend removing the CPU or the heatsink. However, if you do need to remove the heatsink, please follow the instructions below to prevent damage to the CPU or other components.

1. Unscrew the heatsink screws from the motherboard a few turns at a time, alternating between the two until the screws can be removed.
2. Gently wriggle the heatsink to loosen it from the CPU. (Do not use excessive force when wriggling the heatsink!)
3. Once the heatsink is loose, remove the it from the CPU socket.
4. Clean the surface of the CPU and the heatsink, removing the used thermal grease. Reapply the proper amount of thermal grease on the surface before re-installing the CPU and the heatsink.

5-4 Installing Memory

Caution: Exercise extreme care when installing or removing DIMM modules to prevent any possible damage.

The H8DGG-QF serverboard supports single/dual/tri/quad-channel, DDR3 Registered ECC DDR3-1600/1333/1066 Mhz or DDR3 Unbuffered ECC/non-ECC SDRAM.

Note: Check the Supermicro web site for recommended DIMMs.

Installing Memory Modules

1. Insert each memory module vertically into its slot, paying attention to the notch along the bottom of the module to prevent inserting the module incorrectly (see Figure 5-4).
2. Install to slots CPU1/DIMM1A, CPU1/DIMM2A, CPU1/DIMM3A and CPU1/DIMM4A, etc. Always install in groups of four and in the numerical order of the DIMM slots. See support information below.
3. Gently press down on the memory module until it snaps into place.
4. With two CPUs installed, repeat step 2 to populate the CPU2 DIMM slots. Always install four DIMMs to both CPU DIMM slots for more efficient operation.

Note: 1 GB, 2 GB, 4 GB, 8 GB, 16 GB or 32 GB size memory modules are supported. It is highly recommended that you remove the power cord from the system before installing or changing memory modules. Please refer to our web site for memory that has been tested on the H8DGG-QF serverboard.

Maximum Memory

Maximum memory for the H8DGG-QF serverboard is up to 512 GB of DDR3 Registered ECC or 128 GB of DDR3 Unbuffered ECC/non-ECC SDRAM.

Figure 5-4. DIMM Installation

To Install: Insert module vertically and press down until it snaps into place. Pay attention to the alignment notch at the bottom.

To Remove: Use your thumbs to gently push the release tabs near both ends of the module. This should release it from the slot.

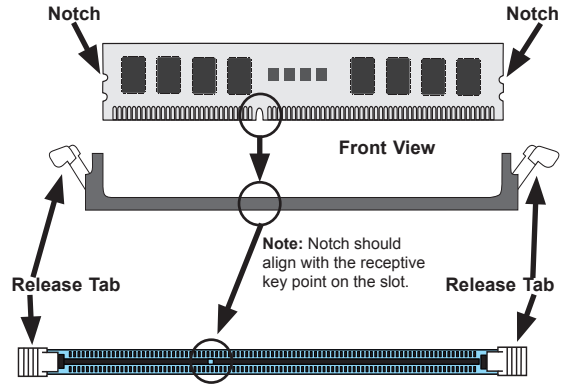

Top View of DDR3 Slot

Memory Population for Optimal Performance -For a Motherboard with One CPU (CPU1) Installed									
# DIMMS	**CPU**	**Channel 1**		**Channel 2**		**Channel 3**		**Channel 4**	
4 DIMMs	CPU1	P1-1A		P1-2A		P1-3A		P1-4A	
8 DIMMs	CPU1	P1-1A	P1-1B	P1-2A	P1-2B	P1-3A	P1-3B	P1-4A	P1-4B

Memory Population for Optimal Performance -For a Motherboard with Two CPUs (CPU1 & CPU2) Installed									
# DIMMS	**CPU**	**Channel 1**		**Channel 2**		**Channel 3**		**Channel 4**	
8 DIMMs	CPU1	P1-1A		P1-2A		P1-3A		P1-4A	
	CPU2	P2-1A		P2-2A		P2-3A		P2-4A	
16 DIMMs	CPU1	P1-1A	P1-1B	P1-2A	P1-2B	P1-3A	P1-3B	P1-4A	P1-4B
	CPU2	P2-1A	P2-1B	P2-2A	P2-2B	P2-3A	P2-3B	P2-4A	P2-4B

DIMM Module Population Configuration

For memory to work properly, follow the tables below for memory installation:

Per Channel DIMM Populations Options					
DIMM Type	**DIMM A**	**DIMM B**	**Max. MHz, 1.5V DIMMs**	**Max. MHz, 1.35V DIMMs**	**Max. GB/ Channel**
UDIMM	SR or DR	Empty	1600 MHz	1333 MHz	8 GB
	SR	SR	1600 MHz		8 GB
	DR	DR	1333 MHz		16 GB
RDIMM	SR or DR	Empty	1600 MHz	1333 MHz	16 GB
	SR	SR	1600 MHz		16 GB
	DR	DR	1600 MHz		32 GB
	QR	Empty	1333 MHz	1066 MHz	32 GB
	QR	QR	1066 MHz	800 MHz	64 GB
LRDIMM	QR	Empty		1333 MHz	32 GB
	QR	QR		1333 MHz	64 GB

Note 1: Due to OS limitations, some operating systems may not show more than 4 GB of memory.

Note 2: Due to memory allocation to system devices, the amount of memory that remains available for operational use will be reduced when 4 GB of RAM is used. The reduction in memory availability is disproportional.

Possible System Memory Allocation & Availability		
System Device	**Size**	**Physical Memory Available (4 GB Total System Memory)**
Firmware Hub flash memory (System BIOS)	1 MB	3.99 GB
Local APIC	4 KB	3.99 GB
Area Reserved for the chipset	2 MB	3.99 GB
I/O APIC (4 Kbytes)	4 KB	3.99 GB
PCI Enumeration Area 1	256 MB	3.76 GB
PCI Express (256 MB)	256 MB	3.51 GB
PCI Enumeration Area 2 (if needed) - aligned on 256 MB boundary-	512 MB	3.01 GB
VGA Memory	16 MB	2.85 GB
TSEG	1 MB	2.84 GB
Memory available for the OS & other applications		2.84 GB

5-5 Serverboard Details

Figure 5-5. H8DGG-QF Serverboard Layout

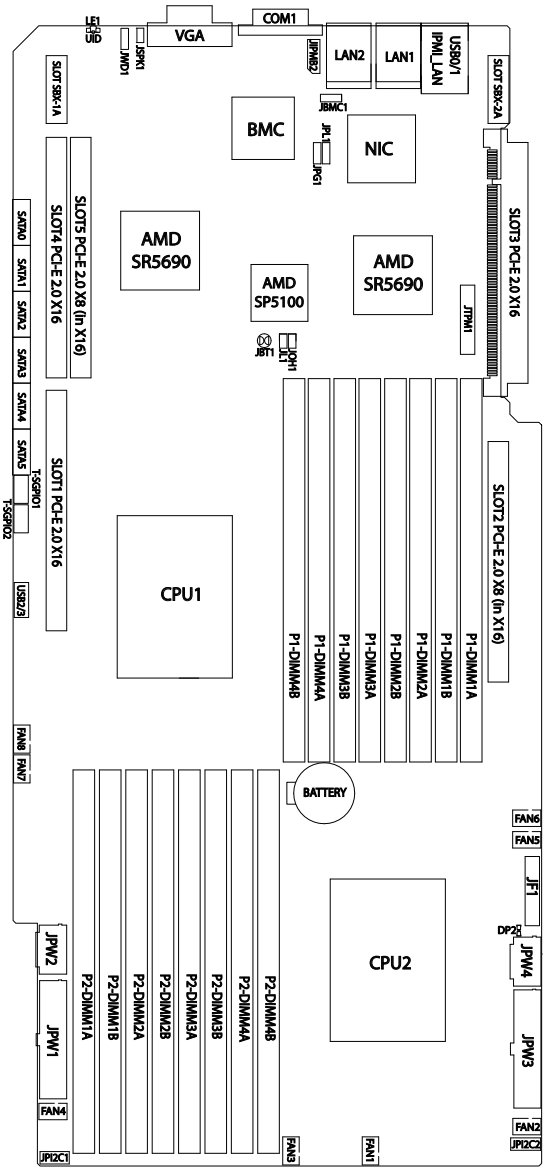

H8DGG-QF Quick Reference

Jumper	Description	Default Setting
JBT1	CMOS Clear	(See Section 5-7)
JBMC1	BMC Enable/Disable	Pins 1-2 (Enabled)
JPG1	VGA Enable/Disable	Pins 1-2 (Enabled)
JPL1	LAN 1/2 Enable/Disable	Pins 1-2 (Enabled)
JWD1	Watch Dog	Pins 1-2 (Reset)

LED	Description
LAN Ports	LEDs for the LAN Ethernet ports
Dedicated IPMI LAN	LEDs for the dedicated IPMI LAN Ethernet port
LE1	LED for UID Button
DP2	LED for Serverboard Power-On

Connector	Description
COM1	COM1 Serial Port
FAN 1-8	Chassis/CPU Fan Headers
IPMI LAN	Dedicated IPMI LAN Port
JF1	Front Panel Connector
JIPMB2	System Management Bus Header for the IPMI Slot
JL1	Chassis Intrusion Header
JOH1	Overheat Warning Header
JPI2C1/JPI2C2	Power I^2C Headers
JPW1/3	20-pin Main ATX Power Connectors
JPW2/4	+12V 8-pin CPU Power Connectors
JSPK1	Speaker Header
JTPM1	Trusted Platform Module Header
LAN1/2	Gigabit Ethernet (RJ45) Ports
SATA0 ~ SATA5	SATA Ports
T-SGPIO-1/TSGPIO-2	Serial General Purpose Input/Output Header for SATA
UID	Unit Identifier Button
USB0/1 and USB2/3	Universal Serial Bus (USB) Ports and Headers
VGA	VGA Connector

Note: Jumpers not indicated are for test purposes only.

5-6 Connector Definitions

Power Connectors

A 20-pin main power supply connector(JPW1/JPW3) and three 8-pin CPU PWR connectors (JPW2/JPW4) on the motherboard. For power on , either connector JPW1/JPW3, or JPW2/JPW4, or both must be connected. This board supports power supply redundancy.

These power connectors meet the SSI EPS 12V specification. In addition to the 20-pin ATX power connectors, the 12V 8-pin CPU PWR connectors at JPW2 and JPW4 must also be connected to your power supply. See the table on the right for pin definitions.

Warning: To prevent damage to the power supply or motherboard, please use a power supply that contains a 20-pin and three 8-pin power connectors. Be sure to connect these connectors to the 20-pin (JPW1 and JPW3) and the three 8-pin (JPW2 and JPW4) power connectors on the motherboard. Failure in doing so will void the manufacturer warranty on your power supply and motherboard.

ATX Power 20-pin Connector Pin Definitions

Pin#	Definition	Pin #	Definition
11	PS_ON_N	1	GND1
12	5V_STBY	2	GND2
13	GND6	3	GND3
14	GND7	4	GND4
15	GND8	5	GND5
16	NC2	6	NC1
17	12V_5	7	12V_1
18	12V_6	8	12V_2
19	12V_7	9	12V_3
20	12V_8	10	12V_4

12V 8-pin PWR Connector Pin Definitions

Pins	Definition
1 through 4	Ground
5 through 8	+12V

Required Connection

PW_ON Connector

The PW_ON connector is on pins 1 and 2 of JF1. This header should be connected to the chassis power button. See the table on the right for pin definitions.

Power Button Pin Definitions (JF1)

Pin#	Definition
1	PW_ON
2	Ground

Reset Connector

The reset connector is located on pins 3 and 4 of JF1 and attaches to the reset switch on the computer chassis. See the table on the right for pin definitions.

Reset Button Pin Definitions (JF1)

Pin#	Definition
3	Reset
4	Ground

Overheat/Fan Fail LED (OH)

Connect an LED to the OH connection on pins 7 and 8 of JF1 to provide advanced warning of chassis overheating or fan failure. Refer to the table on the right for pin definitions and status indicators.

OH/Fan Fail LED Pin Definitions (JF1)

Pin#	Definition
7	Vcc
8	Control

OH/Fan Fail LED Status

State	Indication
Solid	Overheat
Blinking	Fan fail

NIC2 (LAN2) LED

The LED connections for LAN2 are on pins 9 and 10 of JF1. Attach LAN LED cables to display network activity. See the table on the right for pin definitions.

NIC2 LED Pin Definitions (JF1)

Pin#	Definition
9	Activity
10	Linkup

NIC1 (LAN1) LED

The LED connections for LAN1 are on pins 11 and 12 of JF1. Attach LAN LED cables to display network activity. See the table on the right for pin definitions.

NIC1 LED Pin Definitions (JF1)

Pin#	Definition
11	Activity
12	Linkup

HDD LED

The HDD LED connection is located on pins 13 and 14 of JF1. Attach the hard drive LED cable here to display disk activity (for any hard drives on the system). See the table on the right for pin definitions

HDD LED Pin Definitions (JF1)

Pin#	Definition
13	Vcc
14	HD Active

Power On LED

The Power On LED connector is located on pins 15 and 16 of JF1. This connection is used to provide LED indication of power being supplied to the system. See the table on the right for pin definitions.

Power LED Pin Definitions (JF1)

Pin#	Definition
15	5V Stby
16	Control

NMI Button

The non-maskable interrupt button header is located on pins 19 and 20 of JF1. Refer to the table on the right for pin definitions.

NMI Button Pin Definitions (JF1)

Pin#	Definition
19	Control
20	Ground

Universal Serial Bus Ports

Two Universal Serial Bus ports (USB 2.0) are on the serverboard. See the table on the right for pin definitions.

Universal Serial Bus Ports Pin Definitions (USB0/1)

USB0		USB1	
Pin #	Definition	Pin #	Definition
1	+5V	1	+5V
2	PO-	2	PO-
3	PO+	3	PO+
4	Ground	4	Ground

USB Headers

Two USB 2.0 headers (USB2/3) are also included on the motherboard. These may be connected to provide front side access. A USB cable (not included) is needed for the connection. See the table on the right for pin definitions.

Universal Serial Bus Headers Pin Definitions (USB2/3)

USB2		USB3	
Pin #	Definition	Pin #	Definition
1	+5V	1	+5V
2	PO-	2	PO-
3	PO+	3	PO+
4	Ground	4	Ground
5	Key	5	NC

Note: NC indicates no connection.

Fan Headers

This motherboard has eight fan headers (Fan1 to Fan8). These 4-pin fans headers are backward compatible with 3-pin fans. However, fan speed control is available for 4-pin fans only. The fan speeds are controlled by the BIOS. See the table on the right for pin definitions

Fan Header Pin Definitions

Pin#	Definition
1	Ground
2	+12V
3	Tachometer
4	PWR Modulation

Video Connector

A Video (VGA) connector is located below the COM Port on the IO backplane. This connector is used to provide video and CRT display.

SGPIO

The T-SGPIO1/ T-SGPIO2 (Serial General Purpose Input/Output) headers provide a bus between the SATA controller and the backpane to provide SATA enclosure management functions. Connect the appropriate cable from the backplane to the T-SGPIO1 header to utilize SATA management functions on your system.

SGPIO Header Pin Definitions (T-SGPIO1/TSGPIO2)

Pin#	Definition	Pin #	Definition
1	NC	2	NC
3	Ground	4	Data
5	Load	6	Ground
7	NC	8	NC

Note: NC indicates no connection.

Power SMB (I^2C)

The Power System Management Bus (I^2C) connector (JPI2C1) monitors the power suppply, fan and system temperatures. See the table on the right for pin definitions.

Power SMB I^2C Pin Definitions (JPI2C)

Pin#	Definition
1	Clock
2	Data
3	PWR Fail
4	Ground
5	+3.3V

Chassis Intrusion

A Chassis Intrusion header is located at JL1. Attach the appropriate cable to inform you of a chassis intrusion.

Chassis Intrusion Pin Definitions (JL1)

Pin#	Definition
1	Battery voltage
2	Intrusion signal

IPMB

A System Management Bus header for the IPMI slot is located at IPMB. Connect the appropriate cable here to use the IPMB I2C connection on your system.

IPMB Pin Definitions

Pin#	Definition
1	Data
2	Ground
3	Clock
4	No Connection

Overheat LED

Connect an LED to the JOH1 header to provide warning of chassis overheating. See the table on the right for pin definitions.

Overheat LED Pin Definitions (JOH1)

Pin#	Definition
1	3.3V
2	OH Active

Unit Identifier Button

There is one Unit Identifier (UID) button on the rear control I/O panel and another UID button located on the control panel. When you push either UID button, both Rear UID and Front Panel UID Indicators will illuminate. Push either button again to turn off both indicators. These UID indicators provide easy identification of a system unit that may be in need of service.

UID Button Pin Definitions

Pin#	Definition
1	Ground
2	Ground
3	Button In
4	Ground

Serial Port

The COM1 serial port is located beside the VGA port. See the table on the right for pin definitions.

Serial Port Pin Definitions (COM1)

Pin #	Definition	Pin #	Definition
1	DCD	6	DSR
2	RXD	7	RTS
3	TXD	8	CTS
4	DTR	9	RI
5	Ground	10	NC

Note: NC indicates no connection.

LAN1/2 (Ethernet Ports)

Two Gigabit Ethernet ports (designated LAN1 and LAN2) are located beside the VGA port. Additionally, there is a dedicated LAN for IPMI on top of the two rear USB ports. These Ethernet ports accept RJ45 type cables.



LAN Ports (LAN1/2) Pin Definition

Pin#	Definition	Pin#	Definition
1	P2V5SB	10	SGND
2	TD0+	11	Act LED
3	TD0-	12	P3V3SB
4	TD1+	13	Link 100 LED (Yellow, +3V3SB)
5	TD1-	14	Link 1000 LED (Yellow, +3V3SB)
6	TD2+	15	Ground
7	TD2-	16	Ground
8	TD3+	17	Ground
9	TD3-	18	Ground

NC indicates no connection.

Trusted Platform Module Header

The JTPM1 header is used to connect a Trusted Platform Module (TPM), available separately from a third-party vendor. A TPM is a security device that allows encryption and authentication of hard drives, disallowing access if the TPM associated with it is not installed in the system. See the table on the right for pin definitions.

Trusted Platform Module Header Pin Definitions (JTPM1)

Pin#	Definition	Pin#	Definition
1	LCLK	2	GND
3	LFRAME	4	No Pin
5	LRESET	6	VCC5
7	LAD3	8	LAD2
9	VCC3	10	LAD1
11	LAD0	12	GND
13	RSV0	14	RSV1
15	SB3V	16	SERIRQ
17	GND	18	CLKRUN
19	LPCPD	20	RSV2

5-7 Jumper Settings

Explanation of Jumpers

To modify the operation of the motherboard, jumpers can be used to choose between optional settings. Jumpers create shorts between two pins to change the function of the connector. Pin 1 is identified with a square solder pad on the printed circuit board. See the diagram at right for an example of jumping pins 1 and 2. Refer to the motherboard layout page for jumper locations.

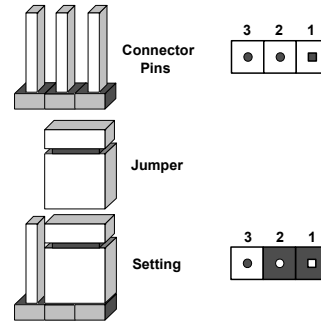

Note: On two-pin jumpers, "Closed" means the jumper is on and "Open" means the jumper is off the pins.



CMOS Clear

JBT1 is used to clear CMOS, which will also clear any passwords. Instead of pins, this jumper consists of contact pads to prevent accidentally clearing the contents of CMOS.

To Clear CMOS

1. First power down the system and unplug the power cord(s). It is also recommended that you remove the onboard battery from the serverboard.
2. With the power disconnected, short the CMOS pads with a metal object such as a small screwdriver.
3. Remove the screwdriver (or shorting device).
4. Reconnect the power cord(s) and power on the system.

Note 1. For an ATX power supply, you must completely shut down the system, remove the AC power cord, and then short JBT1 to clear CMOS.

Note 2. Be sure to remove the onboard CMOS Battery before you short JBT1 to clear CMOS.

Note 3. Clearing CMOS will also clear all passwords.

Note 4: *Do not use the PW_ON connector to clear CMOS*.

BMC Jumper

JBMC1 is used to enable or disable theBMC (Baseboard Management Control) Chip and the onboard IPMI connection.This jumper is used together with the IPMI settings in the BIOS. The default position is on pins 1 and 2 to Enable BMC. See the table on the right for jumper settings.

BMC Jumper Enable (JBMC1) Jumper Settings

Jumper Setting	Definition
Pins 1-2	Enabled (default)
Pins 2-3	Disabled

Watch Dog Enable/Disable

JWD enables the Watch Dog function, a system monitor that takes action when a software application freezes the system. Jumping pins 1-2 will have WD reboot the system if a program freezes. Jumping pins 2-3 will generate a non-maskable interrupt for the program that has frozen. See the table on the right for jumper settings. Watch Dog must also be enabled in BIOS.

Watch Dog Jumper Settings (JWD)

Jumper Setting	Definition
Pins 1-2	Reset
Pins 2-3	NMI
Open	Disabled

Note: when Watch Dog is enabled, the user must write their own application software to disable the Watch Dog Timer.

LAN1/2 Enable/Disable

Change the setting of jumper JPL1 to enable to enable or disable the LAN1 and LAN2 Ethernets ports. See the table on the right for jumper settings. The default setting is enabled.

LAN1/2 En/Disable Jumper Settings (JPL1)

Jumper Setting	Definition
Pins 1-2	Enabled
Pins 2-3	Disabled

VGA Enable/Disable

JPG1 allows you to enable or disable the VGA port. The default position is on pins 1 and 2 to enable VGA. See the table on the right for jumper settings.

VGA Enable/Disable Jumper Settings (JPG1)

Jumper Setting	Definition
Pins 1-2	Enabled
Pins 2-3	Disabled

5-8 Onboard Indicators

LAN1/LAN2 LEDs

The Ethernet ports (located beside the VGA port) have two LEDs. On each Gb LAN port, one LED blinks to indicate activity while the other may be green, amber or off to indicate the speed of the connection. See the table on the right for the functions associated with the connection speed LED.

LAN LED (Connection Speed Indicator)

LED Color	Definition
Off	10 MHz
Green	100 MHz
Amber	1 GHz

Dedicated IPMI LAN LEDs

A dedicated IPMI LAN is also included on the H8DGG-QF serverboard. The amber LED on the right indicates activity, while the green LED on the left indicates the speed of the connection. See the table at right for more information.

IPMI LAN Link LED (Left) & Activity LED (Right)

Color	Status	Definition
Green: Solid	Link (Left)	100 Mb/s
Amber Blinking	Activity (Right)	Active

UID LED (LE1)

A rear UID LED Indicator, located at LE1, works in conjunction with the rear UID switch to provide easy identification for a unit that might be in need of service. Refer to Page 2-13 for further UID details.

Power LED

DP2 is an Onboard Power LED. When this LED is lit, it means power is present on the serverboard. Be sure to turn off the system and unplug the power cord(s) before removing or installing components.

Power LED (DP2)

State	System Status
On	Standby power present on motherboard
Off	No power connected

5-9 SATA Drive Connections

SATA Ports

There are no jumpers to configure the SATA ports, which are designated SATA0 through SATA5. See the table on the right for pin definitions.

SATA Ports Pin Definitions (SATA0-SATA3)

Pin #	Definition
1	Ground
2	TXP
3	TXN
4	Ground
5	RXN
6	RXP
7	Ground

5-10 Enabling SATA RAID

Now that the hardware is set up, you must install the operating system and the SATA RAID drivers, if you wish to use RAID with your SATA drives. The installation procedure differs depending on whether you wish to have the operating system installed on a RAID array or on a separate non-RAID drive. See the instructions below for details.

Serial ATA (SATA)

Serial ATA (SATA) is a physical storage interface that employs a single cable with a minimum of four wires to create a point-to-point connection between devices. This connection is a serial link that supports a SATA transfer rate from 150 MBps. The serial cables used in SATA are thinner than the traditional cables used in Parallel ATA (PATA) and can extend up to one meter in length, compared to only 40 cm for PATA cables. Overall, SATA provides better functionality than PATA.

Installing the OS/SATA Driver

Before installing the OS (operating system) and SATA RAID driver, you must decide if you wish to have the operating system installed as part of a bootable RAID array or installed to a separate non-RAID hard drive. If on a separate drive, you may install the driver either during or after the OS installation. If you wish to have the OS on a SATA RAID array, you must follow the procedure below and install the driver during the OS installation.

Building a Driver Diskette

You must first build a driver diskette from Supermicro drivers for your system. Drivers can be found at ftp://ftp.supermicro.com. (You will have to create this disk on a computer that is already running and with the OS installed.)

Building a Driver Diskette

1. Install your system drives from the FTP website. A display as shown in Figure 5-7 will appear.
2. Click on the icon labeled “Build Driver Diskettes and Manuals” and follow the instructions to create a floppy disk with the drivers on it.
3. Once it’s been created, remove the floppy and insert the installation CD for the Windows Operating System you wish to install into the CD-ROM drive of the new system you are about to configure.

Note: You need to have an external USB floppy when building the driver diskette. Window’s Vista, Windows 2008 or later Windows OS systems can use a USB stick instead of a floppy.

Enabling SATA RAID in the BIOS

Before installing the Windows Operating System, you must change some settings in BIOS. Boot up the system and hit the <Del> key to enter the BIOS Setup Utlility. After the Setup Utility loads,

1. Use the arrow keys to move to the Exit menu. Scroll down with the arrow keys to the "Load Optimal Defaults setting and press <Enter>. Select "OK" to confirm, then <Enter> to load the default settings.

2. Use the arrow keys to move to the "Advanced" menu, scroll down to "Advanced Chipset Control" and then select "SouthBridge Configuration". Once in this submenu, scroll down to "OnChip SATA Type" and choose the "RAID" option (see Figure 5-6).

Figure 5-6. BIOS Setup Screen

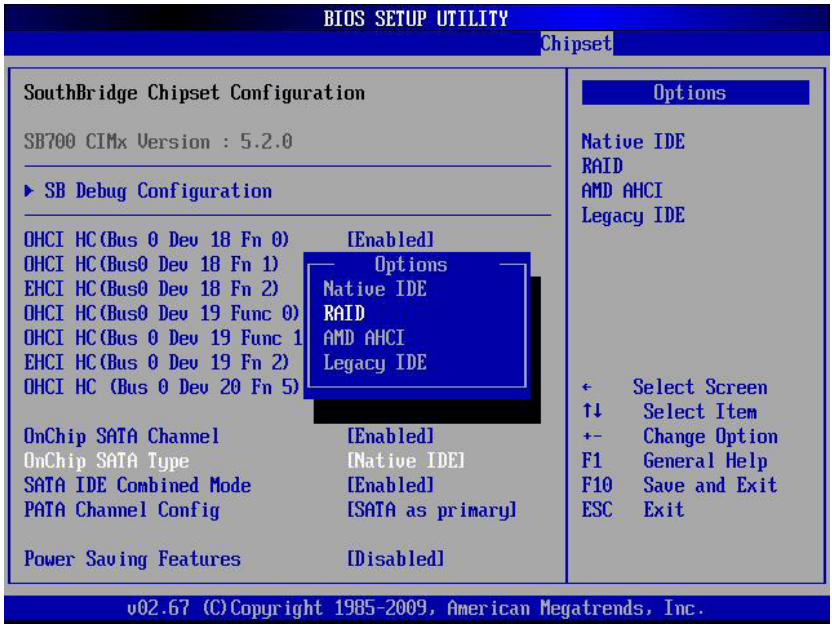

3. Hit the <Esc> key twice and scroll to the Exit menu. Select "Save Changes and Exit" and hit <enter>, then hit <Enter> again to verify.

4. After exiting the BIOS Setup Utility, the system will reboot. When prompted during the startup, press the <CTRL+A> key when prompted to run the Adaptec RAID Utility program (see Figure 5-7).

Figure 5-7. Adaptec RAID Utility Program Screen

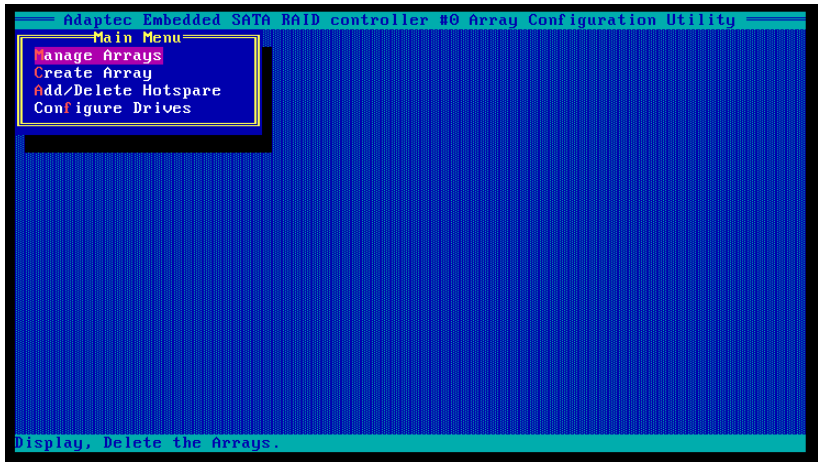

Using the Adaptec RAID Utility

The Adaptec® RAID Utility program is where you can define the drives you want to include in the RAID array and the mode and type of RAID.

Installing the RAID Driver During OS Installation

You may also use the procedure below to install the RAID driver during the Window's OS installation:

1. With the Windows OS installation CD in the CD-ROM drive, restart the system.
2. When you see the prompt, hit the <F6> key to enter Windows setup.
3. Eventually a blue screen will appear with a message that begins "Windows could not determine the type of one or more storage devices . . ." When you see the screen, hit the <S> key to "Specify Additional Device", then insert the driver diskette you just created into the floppy drive.
4. Highlight "Manufacturer Supplied Hardware Support Disk" and hit the <Enter> key.
5. Highlight the first "Adaptec RAID" driver shown and press the <Enter> key to install it.
6. Press <Enter> again to continue with the Windows setup.

5-11 Installing Software

The Supermicro ftp site contains drivers and utilities for your system at ftp://ftp.supermicro.com. Some of these must be installed, such as the chipset driver.

After accessing the ftp site, go into the CDR_Images directory and locate the ISO file for your motherboard. Download this file to create a CD/DVD of the drivers and utilities it contains. (You may also use a utility to extract the ISO file if preferred.)

Another option is to go to the Supermicro Website at http://www.supermicro.com/products/. Find the product page for your motherboard here, where you may download individual drivers and utilities.

After creating a CD/DVD with the ISO files, insert the disk into the CD/DVD drive on your system and the display shown in Figure 5-8 should appear

Figure 5-8. Driver/Tool Installation Display Screen

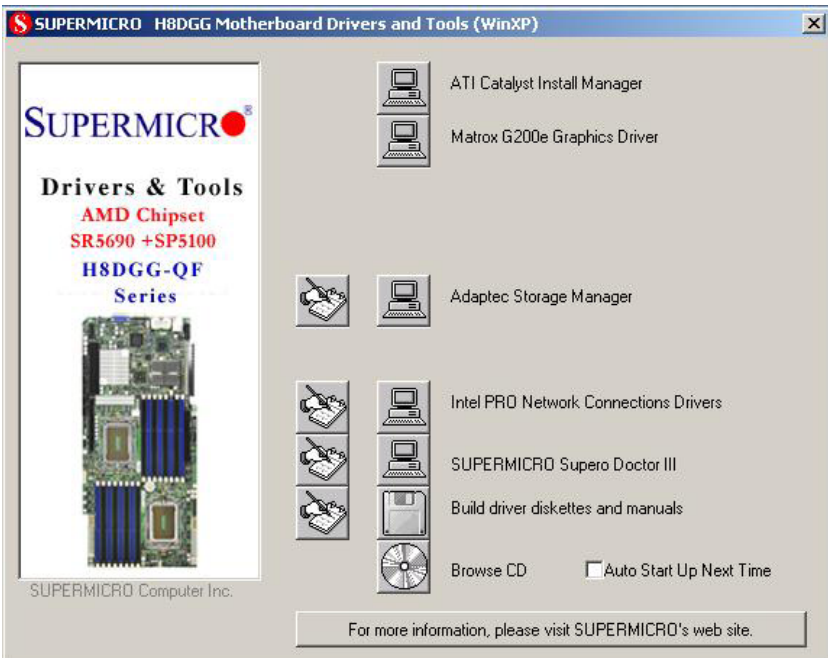

Click the icons showing a hand writing on paper to view the readme files for each item. Click the computer icons to the right of these items to install each item (from top to the bottom) one at a time. After installing each item, you should reboot the system before moving on to the next item on the list. The bottom icon with a CD on it allows you to view the entire contents of the utilities.

SuperDoctor III

The SuperDoctor® III program is a Web base management tool that supports remote management capability. It includes Remote and Local Management tools. The local management is called SD III Client. The SuperDoctor III program allows you to monitor the environment and operations of your system. SuperDoctor III displays crucial system information such as CPU temperature, system voltages and fan status. See the figures below for examples of the SuperDoctor III interface

Note: The default User Name and Password for SuperDoctor III is ADMIN / ADMIN.

Note: When SuperDoctor is first installed, it adopts the temperature threshold settings that have been set in BIOS. Any subsequent changes to these thresholds must be made within SuperDoctor, as the SuperDoctor settings override the BIOS settings. To set the BIOS temperature threshold settings again, you would first need to uninstall SuperDoctor.

Figure 5-9. SuperDoctor III Interface Display Screen (Health Information)

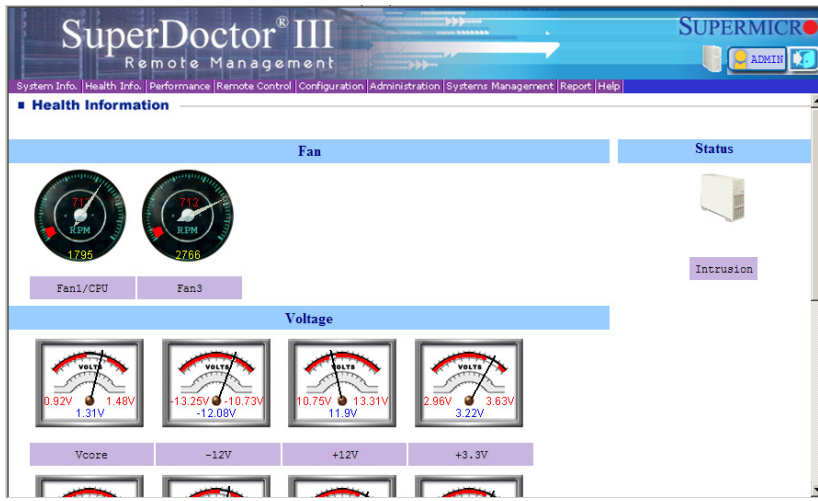

Figure 5-10. SuperDoctor III Interface Display Screen (Remote Control)



Note: The SuperDoctor III program and User's Manual can be downloaded from the Supermicro web site at http://www.supermicro.com/products/accessories/software/SuperDoctorIII.cfm.For Linux, we recommend that you use the SuperoDoctor II application instead.

5-12 Serverboard Battery

Caution: There is a danger of explosion if the onboard battery is installed upside down, which will reverse its polarites (see Figure 5-11). This battery must be replaced only with the same or an equivalent type recommended by the manufacturer (CR2032). Dispose of used batteries according to the manufacturer's instructions.

Figure 5-11. Installing the Onboard Battery

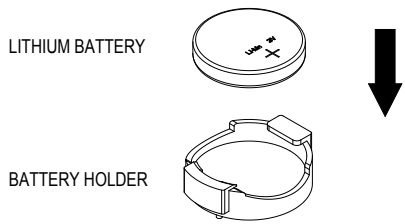

Please handle used batteries carefully. Do not damage the battery in any way; a damaged battery may release hazardous materials into the environment. Do not discard a used battery in the garbage or a public landfill. Please comply with the regulations set up by your local hazardous waste management agency to dispose of your used battery properly.

Chapter 6

Advanced Chassis Setup

This chapter covers the steps required to install components and perform maintenance on the SC118GTS-1400BP chassis. For component installation, follow the steps in the order given to eliminate the most common problems encountered. If some steps are unnecessary, skip ahead to the next step.

Tools Required: The only tool you will need to install components and perform maintenance is a Philips screwdriver.

6-1 Static-Sensitive Devices

Electrostatic Discharge (ESD) can damage electronic components. To prevent damage to any printed circuit boards (PCBs), it is important to handle them very carefully.

The following measures are generally sufficient to protect your equipment from ESD damage.

Precautions

- Use a grounded wrist strap designed to prevent static discharge.
- Touch a grounded metal object before removing any board from its antistatic bag.
- Handle a board by its edges only; do not touch its components, peripheral chips, memory modules or gold contacts.
- When handling chips or modules, avoid touching their pins.
- Put the serverboard, add-on cards and peripherals back into their antistatic bags when not in use.
- For grounding purposes, make sure your computer chassis provides excellent conductivity between the power supply, the case, the mounting fasteners and the serverboard.

Figure 6-1. Chassis: Front and Rear Views

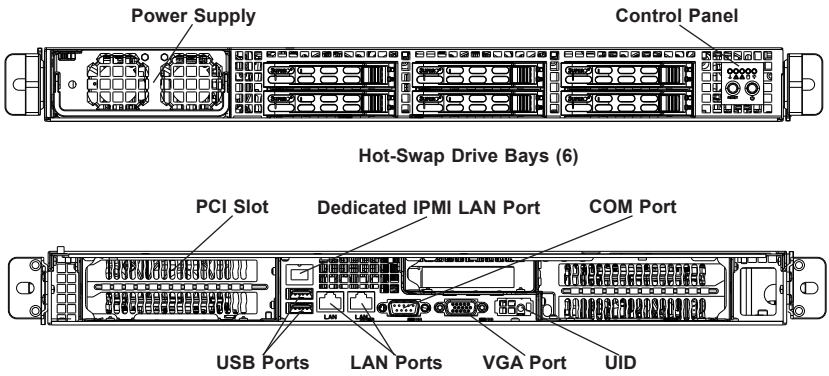

6-2 Control Panel

The control panel (located on the front of the chassis) must be connected to the JF1 connector on the serverboard to provide you with system status indications. A ribbon cable has bundled these wires together to simplify the connection. Connect the cable from JF1 on the serverboard to the appropriate header on the Control Panel PCB (printed circuit board). Make sure the red wire plugs into pin 1 on both connectors. Pull all excess cabling out of the airflow path.

The control panel LEDs inform you of system status. See "Chapter 3: System Interface" for details on the LEDs and the control panel buttons. Details on JF1 can be found in Chapter 5: *Advanced Serverboard Installation*.

6-3 Installing or Removing Drives

Accessing the Drive Bays

Hard Drives: The six hard drive bays can be accessed from the front of the chassis without opening the chassis top cover.

Peripheral Drives: The chassis includes space for a variety of peripheral drive options, including a DVD drive, a floppy drive or a 2.5" hard disk drive. These require opening the chassis cover for installation. For a complete listing of peripheral drive options, consult the Supermicro web site at:

http://www.supermicro.com/products/chassis/1U/818/SC818G-1400.cfm

Hard Drive Installation

The hard drives are mounted in drive carriers to simplify their installation and removal from the chassis. These carriers also help promote proper airflow for the drive bays. For this reason, even empty carriers without drives installed must remain in the chassis during standard operation.

To add hard drives, first remove the drive carriers.

Figure 6-2. Removing a Hard Drive Carrier

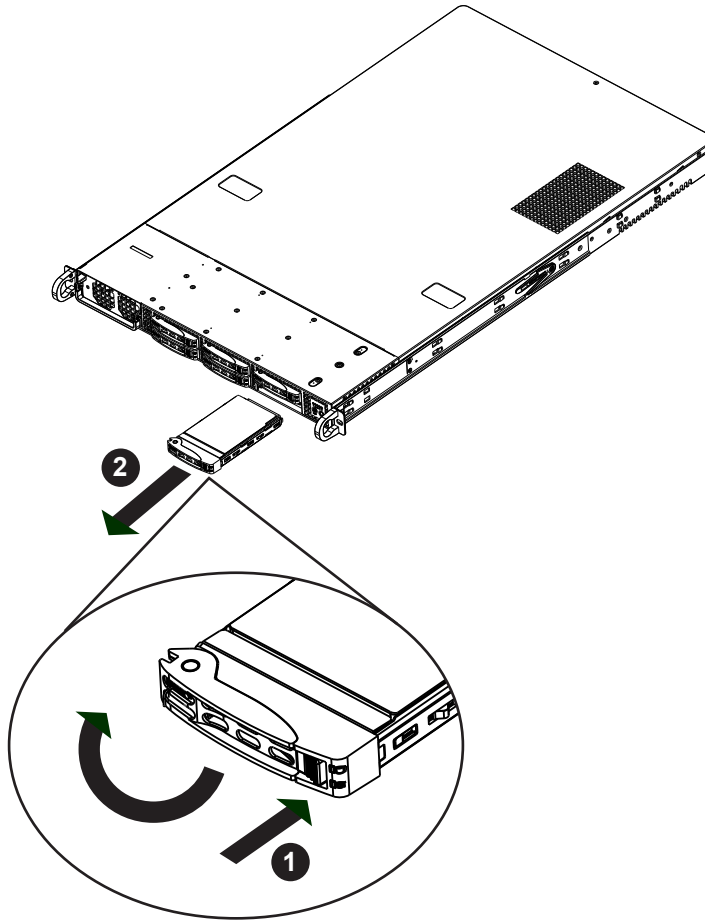

Removing Hard Drive Carriers from the Chassis

1. Press the release button on the drive carrier. This extends the drive carrier handle.

2. Use the handle to pull the drive carrier out of the chassis.

Installing a Hard Drive into a Drive Carrier

1. Remove the dummy drive, which comes pre-installed in the drive carrier, by removing the screws securing the dummy drive to the carrier. Note that these screws cannot be reused on the actual 2.5" hard drive.
2. Insert a drive into the carrier with the printed circuit side facing down and the connector end toward the rear of the carrier.
3. Align the drive in the carrier so that the screw holes of line up. Note that there are holes in the carrier marked “SATA” to aid in correct installation.
4. Secure the drive to the carrier with four M3 screws as illustrated below. These screws are included in the chassis accessory box.

Figure 6-3. Installing a Hard Drive into the Carrier

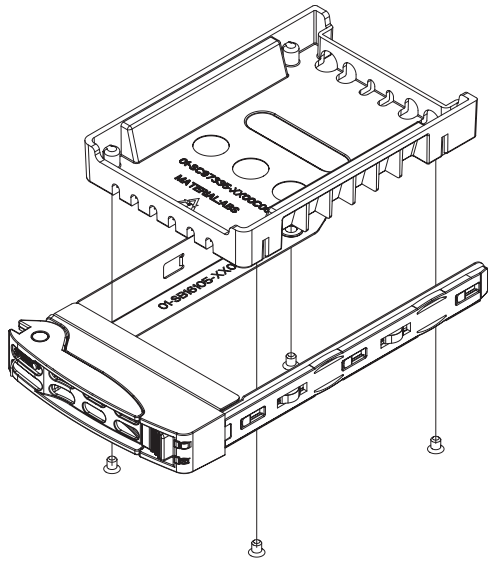

Note: Enterprise level hard disk drives are recommended for use in Supermicro chassis and servers. For information on recommended HDDs, visit the Supermicro Web site at http://www.supermicro.com/products/nfo/files/storage/SAS-CompList.pdf

Installing a Hard Drive Carrier Into the Chassis

1. Insert the drive carrier into its bay, keeping the carrier oriented so that the hard drive is on the top of the carrier and the release button is on the right side. When the carrier reaches the rear of the bay, the release handle will retract.
2. Push the handle in until it clicks into its locked position.

Note: When installing the hard drive carrier which is next to the power supply, that the power supply handle must be lifted before extending the hard drive carrier handle, or inserting the hard drive carrier into the drive bay.

Figure 6-4. Installing/Removing the Carrier Next to the Power Supply

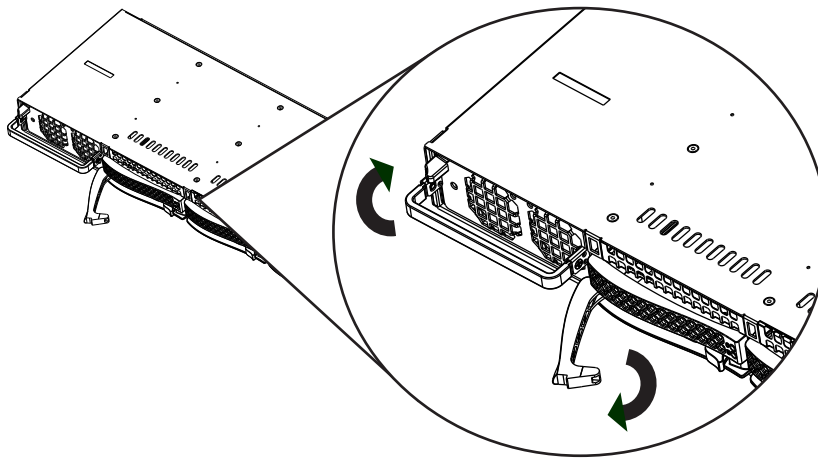

Caution: Except for short periods of time (swapping hard drives), do not operate the server with the hard drive carriers removed.

Peripheral Drive Installation

Installing or Replacing a Peripheral Drive

1. Unplug the main power cords to the chassis.
2. Unplug the power and data cables from the motherboard and/or backplane to any drive you are replacing.
3. **If you are adding a new drive**: Remove the dummy tray from the drive bay The mini-bezel can be removed by pulling out the hard drive beneath the drive bay, then pulling the mini-bezel forward. **If you are replacing a drive**: Locate the locking tab at the rear (left hand side when viewed from the front) of the peripheral drive. Push the tab toward the drive and push the drive unit out the front of the chassis.
4. Insert the new drive unit in the slot until the tab locks in place.
5. Reconnect the data and power cables.
6. Replace the chassis cover and power up the system.

6-4 Installing the Air Shroud

Air shrouds concentrate airflow to maximize fan efficiency. The SC118G chassis air shroud does not require screws to set up

Note: When installilng two GPU cards, the MCP-310-81803-0B air shroud must be used. This air shroud is sold separately. Information is available on the Supermicro Web site at http://www.supermicro.com. Installation of the MCP-310-81803-0B air shroud is identical to the installation of a standard air shroud, which is described below.

Installing the Air Shroud

1. Position the air shroud in the chassis as illustrated below.
2. Align the notch (A) on the air shroud with the pin (B) on the riser card bracket.
3. Slide the pin (B) into the back of the notch (A)
4. Lower the front of the air shroud over the fan housing, sliding the front notches (C) over the pins on the fan housing (D).

Figure 6-5. Installing the Air Shroud

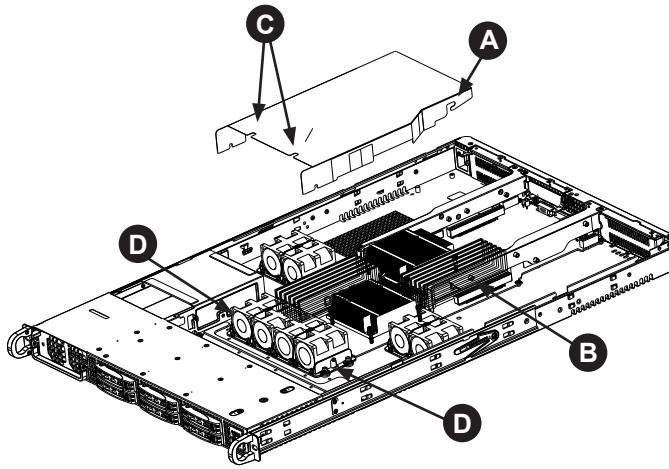

Checking the Air Flow

Checking the Air Flow in the Chassis

- Make sure there are no wires or other objects obstructing the airflow in and out of the server. Pull all excess cabling out of the airflow path or use shorter cables.
- Do not operate the server without drives or drive trays in the drive bays. Use only recommended server parts.
- The control panel LEDs inform you of the overall system status. See “Chapter 4 System Interface” for details on the LEDs and the control panel buttons.

6-5 Installing Expansion Cards

The SC118G chassis includes I/O slots for four full-height, full-length expansion cards, although the 1122GG-TF server supports only two. Alternatively, the server can be configured for two double-width, high-end graphics processor units (GPUs). In addition the chassis and serverboard support one low-profile expansion card

Figure 6-6. Rear Expansion Slots

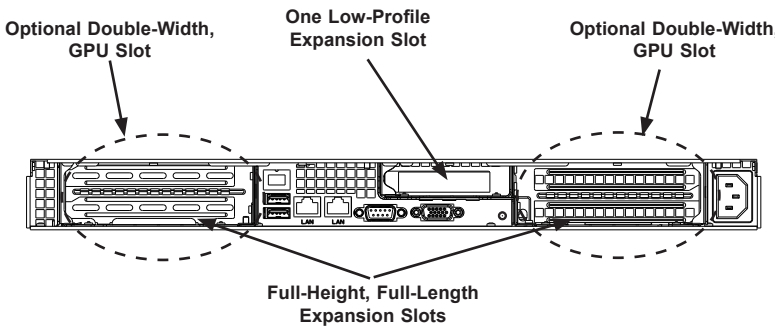

Installing an Expansion Card on the Left Side

On the left side (looking from the front) of the chassis, you can install a full-height, full-width expansion card, or a double width high-end graphics processing unit (GPU).

Installing a Full Height Expansion Card on the Left Side

1. Power down the system and remove the chassis cover.
2. Remove the riser card bracket from the chassis by unscrewing only those screws indicated by the screwdriver icon as illustrated in Figure 6-8. Lift the bracket with the riser card from the chassis.
3. Remove the PCI slot shield in the rear chassis bracket.
4. Slide the expansion card into the slot on the left-side riser card and fit the expansion card shield in the PCI opening in the rear chassis bracket.
5. Secure the expansion card shield in the rear chassis bracket.

Note: If you are also installing a low profile expansion card in the center of the chassis, do it at this point.

6. Replace the riser card bracket, inserting the riser card in the expansion slot on the motherboard, replace the chassis cover and power up.

Figure 6-7. Left Riser Card Bracket and Expansion Cards

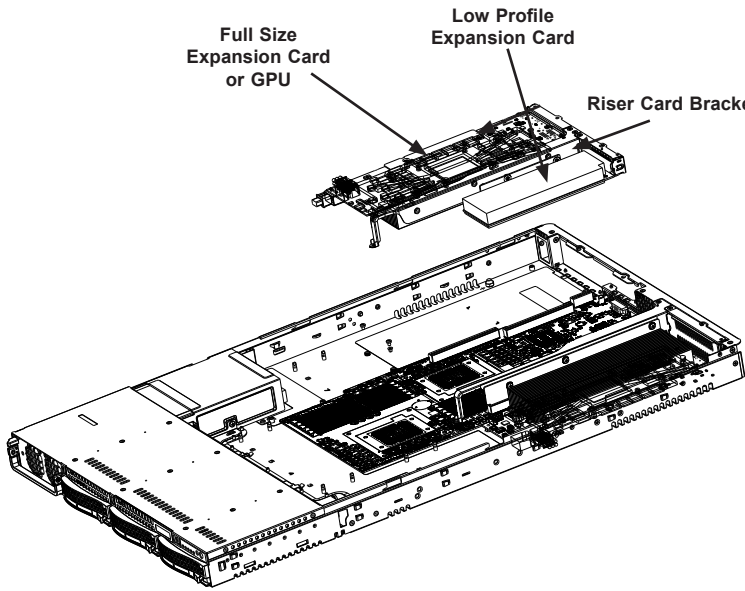

Figure 6-8. Left Riser Card Bracket Installing a Low-Profile Card

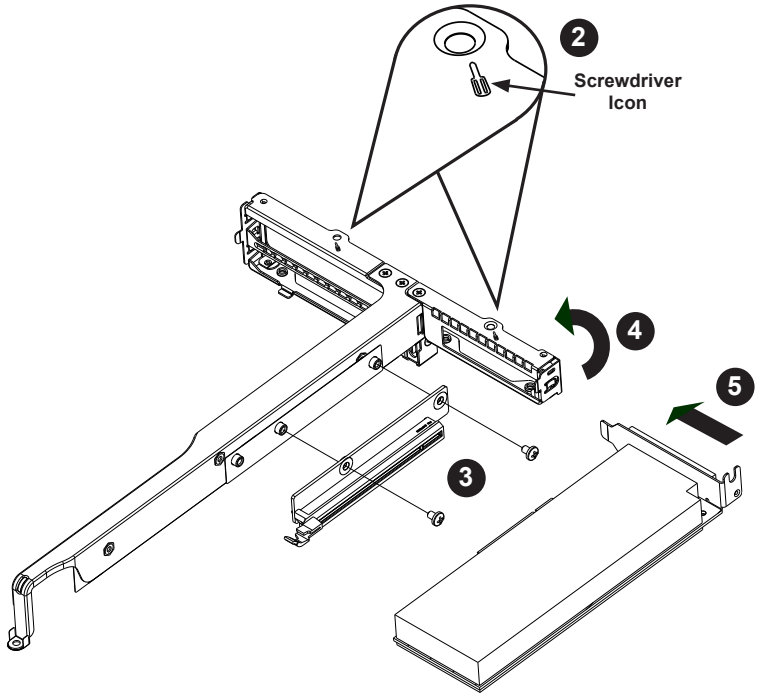

Installing an Expansion Card in the Center

Installing a Low Profile Expansion Card

1. Power down the system and remove the chassis cover.
2. Remove the left riser card bracket from the chassis by unscrewing only those screws indicated by the screwdriver icon. Lift the bracket from the chassis.
3. Install the riser card on the bracket using the two screws provided.
4. Open the latch on the end of the bracket.
5. Install the expansion card by sliding the card into the slot in the riser card and close the bracket latch over the end of it.
6. Reseat the riser card bracket assembly while placing the riser card into the expansion slot on the motherboard.
7. Secure the bracket to the chassis with the screws.
8. Replace the chassis cover and power up.

Installing an Expansion Card on the Right Side

On the right side (looking from the front) of the chassis, you can install a full-height, full-width expansion card, or a double width high-end graphics processing unit (GPU).

Installing a Full Height Expansion Card on the Right Side

1. Power down the system and remove the chassis cover.
2. If you have a right-side riser card bracket along the right edge of the serverboard, remove the bracket from the chassis by unscrewing only those screws indicated by the screwdriver icon. Lift the bracket from the chassis.
3. Remove the PCI slot shield in the rear of the chassis. Remove the small plastic bracket from the right, rear corner of the chassis (Figure 6-9).
4. Slide the expansion card into the slot on the motherboard and fit the expansion card shield in the PCI opening in the rear of the chassis.
5. Secure the expansion card shield. Replace the small plastic bracket in the right, rear corner of the chassis.
6. Replace the chassis cover and power up.

Figure 6-9. Plastic Bracket to Secure the Rear Plate

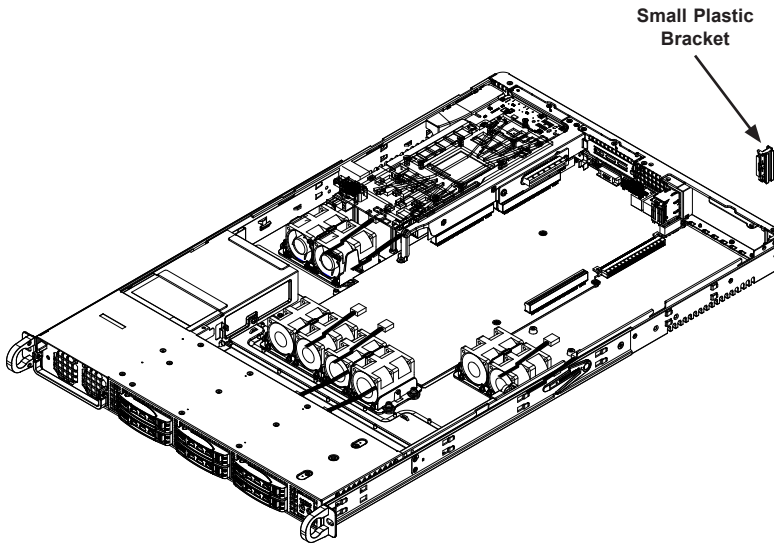

Figure 6-10. GPU Cards in the Chassis

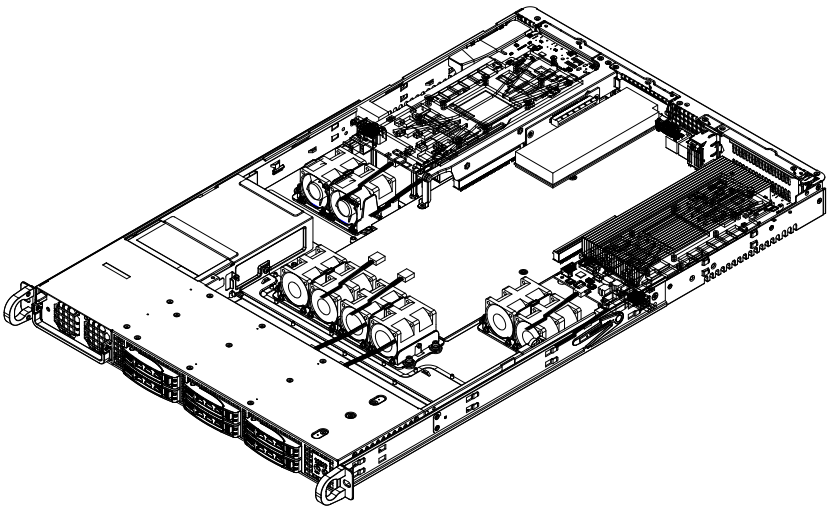

Note: Installing the optional graphics card configuration may require the I/O plate to be modified by cutting off any portion of the plate that may extend over the I/O panel components beside it. A special bracket is available for use with the graphics card that is shorter than the regular dummy bracket.

6-6 System Fans

Eight heavy-duty fans provide cooling for the chassis. These fans circulate air through the chassis as a means of lowering the chassis' internal temperature.

The chassis includes counter-rotating fans. Each fan unit is actually made up of two fans joined back-to-back, which rotate in opposite directions. This counter-rotating action generates exceptional airflow and works to dampen vibration levels.

Figure 6-11. System Fan



Fan Numbering in the BIOS

In the unlikely event of a fan failure, the failed system fan can be identified through the BIOS, by utilizing the fan numbering system shown below. These numbers are also imprinted on the floor of the chassis.

Figure 6-12. Fan BIOS Numbering

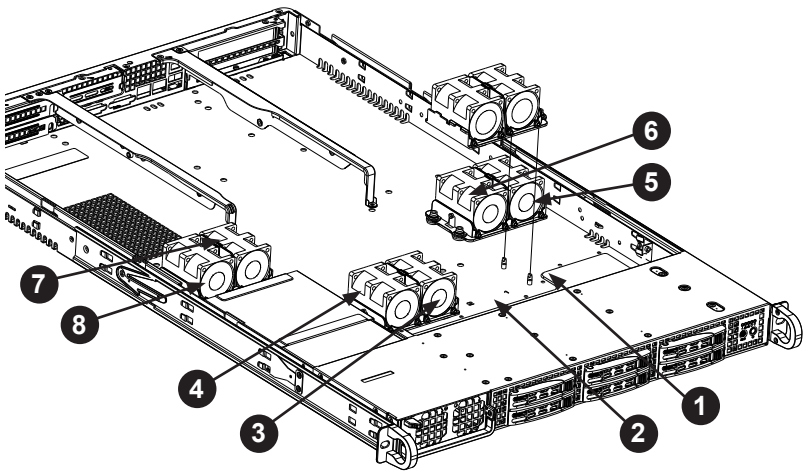

System Fan Failure

Fan speed is controlled by system temperature by means of a BIOS setting. If a fan fails, the remaining fans will ramp up to full speed. The system can continue to run with a failed fan. Replace any failed fan at your earliest convenience with the same type and model.

Replacing a System Fan

1. If the BIOS is not being utilized to determine which fan has failed, open the top cover of the chassis while the system is running to locate the position of the failed fan. Never run the server for an extended period of time with the top cover open.
2. Turn off the power to the system and unplug the system from the outlet.
3. Remove the failed fan's power cable from the backplane.
4. Remove the four pins securing the fan to the fan housing.
5. Lift the failed fan from the fan housing and out of the chassis.
6. Place the new fan into the vacant space in the fan housing, while making sure the arrows on the top of the fan (indicating air direction) point in the same direction as the arrows on the other fans in the same fan housing.
7. Reconnect the fan wires to the exact same chassis fan headers as the previous fan.
8. Power up the system and check that the fan is working properly before replacing the chassis cover.

Figure 6-13. Removing a Fan from the Fan Housing

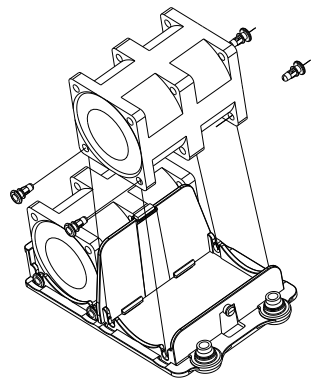

6-7 Power Supply

The SC118G chassis includes a 1400 Watt power supply. This power supply is auto-switching capable. The power supply automatically sense and operates at a 100v to 240v input voltage.

Power Supply Replacement

If the power supply unit fails, the system will shut down and you will need to replace the unit. Replacement units can be ordered directly from Supermicro (see contact information in the Preface). As there is only one power supply unit in the SC118G chassis, power must be completely removed from the server before removing and replacing the power supply unit.

Removing/Replacing the Power Supply (Figure 6-6)

1. Power down the server and unplug the power cord.
2. Push the release tab on the front of the power supply.
3. Lift the handle of the power supply.
4. Pull the power supply out of the power supply bay.
5. Push the new power supply module into the power bay until it clicks into the locked position.
6. Plug the AC power cord back into the module and power up the server.

Figure 6-14. Removing/Replacing the Power Supply

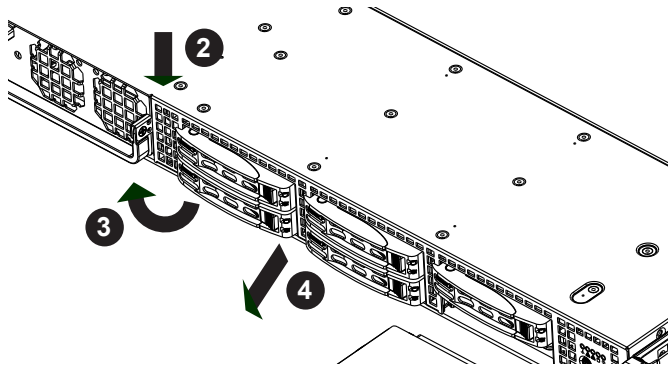

Notes

Chapter 7

BIOS

7-1 Introduction

This chapter describes the AMIBIOS™ Setup utility for the H8DGG-QF serverboard. The 16 Mb AMI BIOS® is stored in a flash chip and can be easily upgraded using a floppy disk-based program.

Note: Due to periodic changes to the BIOS, some settings may have been added or deleted and might not yet be recorded in this manual. Please refer to the Manual Download area of our web site for any changes to BIOS that may not be reflected in this manual.

Starting the Setup Utility

To enter the BIOS Setup Utility, hit the <Delete> key while the system is booting-up. (In most cases, the <Delete> key is used to invoke the BIOS setup screen. There are a few cases when other keys are used, such as <F1>, <F2>, etc.) Each main BIOS menu option is described in this manual.

The Main BIOS screen has two main frames. The left frame displays all the options that can be configured. “Grayed-out” options cannot be configured. The right frame displays the key legend. Above the key legend is an area reserved for a text message. When an option is selected in the left frame, it is highlighted in white. Often a text message will accompany it. (Note that BIOS has default text messages built in. We retain the option to include, omit, or change any of these text messages.) Settings printed in **Bold** are the default values.

A " ▶" indicates a submenu. Highlighting such an item and pressing the <Enter> key will open the list of settings within that submenu.

The BIOS setup utility uses a key-based navigation system called hot keys. Most of these hot keys (<F1>, <F10>, <Enter>, <ESC>, <Arrow> keys, etc.) can be used at any time during the setup navigation process.

7-2 Main Menu

When you first enter AMI BIOS Setup Utility, you will see the Main Menu screen. You can always return to the Main Menu by selecting the ***Main*** tab on the top of the screen with the arrow keys.

The Main Menu screen provides you with a system overview, which includes the version, built date and ID of the AMIBIOS, the type, speed and number of the processors in the system and the amount of memory installed in the system.

System Time/System Date

You can edit this field to change the system time and date. Highlight *System Time* or *System Date* using the <Arrow> keys. Enter new values through the keyboard. Press the <Tab> key or the <Arrow> keys to move between fields. The date must be entered in DAY/MM/DD/YYYY format. The time is entered in HH:MM:SS format. Please note that time is in a 24-hour format. For example, 5:30 A.M. appears as 05:30:00 and 5:30 P.M. as 17:30:00.

7-3 Advanced Settings Menu

▶ Boot Feature Configuration

Quick Boot

If Enabled, this option will skip certain tests during POST to reduce the time needed for the system to boot up. The options are **Enabled** and Disabled.

Quiet Boot

If Disabled, normal POST messages will be displayed on boot-up. If **Enabled**, this display the OEM logo instead of POST messages.

Add On ROM Display Mode

This option sets the display mode for Option ROM. The options are **Force BIOS** or Keep Current.

Bootup Num Lock

This option selects the power-on state for the NUM lock to either **On** or Off.

PS/2 Mouse Support

Use this option to select support for the PS/2 mouse. Options are Disabled, Enabled or **Auto**.

Wait for F1 if Error

This setting controls the system response when an error is detected during the boot sequence. When enabled, BIOS will stop the boot sequence when an error is detected, at which point you will need to press the F1 button to re-enter the BIOS setup menu. The options are **Enabled** and Disabled.

Hit 'DEL' Message Display

Use this option to **Enable** or Disable the "Press DEL to run setup" message in POST.

Watch Dog Function

This option allows the system to restart when it isn't active for more than 5-minutes. Options include Enabled and **Disabled**.

Restore on AC Power Loss

This option sets the action the system will take if there is an AC power loss to the system. Options include Power Off, Power On or **Last State**.

Interrupt 19 Capture

Select Enabled to allow ROMs to trap Interrupt 19. The options are **Enabled** and Disabled.

▶ Processor & Clock Options Configuration

CPU Configuration

This displays static information on the Module Version, AGESA Version, Physical Count and Logical Count for the system's processor(s) and clock.

CPU Information

This setting is used to select which physical CPU's information to display. Options include **Processor 0** or Processor 1. The information for the selected processor includes Processor number, Revision, Cache L1/L2/L3, Speed, NB CLK, Able to Change Frequency and uCode Patch Level.

Note: Zero is always the "Boot Strap Processor" or main CPU with all others being "Application Processors".

GART Error Reporting

This option should remain disabled for normal operation. The driver developer may enable this option for testing purposes. Options are Enabled or **Disabled**.

Microcode Update

This setting **Enables** or Disables microcode updating.

Power Now

This setting is used to **Enable** or Disable the AMD Power Now feature.

ACPI SRAT Table

This option **Enables** or Disables the building of the ACPI SRAT Table.

Clock Spread Spectrum

This option Enables or **Disables** the Clock Spread spectrum feature.

▶ Advanced Chipset Control Configuration

▶ NorthBridge Configuration

▶ Memory Configuration

Channel Interleaving

Selects the channel-interleaving memory scheme when this function is supported by the processor. The options are Disabled or **Auto**.

Enable Clock to All DIMMs

This option allows you to Enable or **Disable** unused clocks to DIMMs even when memory slots are not populated.

Memory Hole Remapping

When "Enabled", this feature enables hardware memory remapping around the memory hole. Options are **Enabled** and Disabled.

CS Sparing Enable

This option will reserve a spare memory rank in each node when enabled. Options are Enable and **Disable**.

Power Down Enable

This option enables or disables DDR power down mode. Options are **Auto**, Enabled and Disabled.

Power Down Mode

This sets the DDR power down mode. Options are **Auto**, Channel and Chip Select.

DRAM Parity Enable

This sets the DRAM Parity Enable to either **Auto**, Enabled and Disabled.

Bank Swizzle Mode

This sets the Bank Swizzle Mode to either **Auto**, Enabled and Disabled.

▶ ECC Configuration

ECC Mode

This submenu sets the level of ECC protection. Options include Disabled, **Basic**, Good, Super, Max and User. Selecting User activates the other options for user setting.

Note: The "Super" ECC mode dynamically sets the DRAM scrub rate so all of memory is scrubbed in 8-hours.

DRAM ECC Enable

This setting allows hardware to report and correct memory errors automatically, maintaining system integrity. Options are **Enabled** or Disabled.

DRAM Scrub Redirect

This setting allows the system to correct DRAM ECC errors immediately when they occur, even if background scrubbing is off. Options are Enabled or **Disabled**.

4-Bit ECC Mode

Allows the user to enabled 4-bit ECC mode (also known as ECC Chipkill). Options are **Enabled** and Disabled.

DRAM BG Scrub

Corrects memory errors so later reads are correct. Options are **Disabled** and various times in nanoseconds and microseconds.

Data Cache BG Scrub

Allows L1 cache RAM to be corrected when idle. Options are **Disabled** and various times in nanoseconds and microseconds.

L2 Cache BG Scrub

Allows L2 cache RAM to be corrected when idle. Options are **Disabled** and various times in nanoseconds and microseconds.

L3 Cache BG Scrub

Allows L3 cache RAM to be corrected when idle. Options are **Disabled** and various times in nanoseconds and microseconds.

▶ DRAM Timing Configuration

DRAM Timing Config

This setting specifies the DRAM timing configuration. Options are **Auto** and Manual.

Memory Timing Parameters

This selects the which node's timing parameters to display. Options are **CPU Node 0** or CPU Node 3.

▶ SouthBridge Configuration

OHCI/EHCI HC Device Functions

These settings allow you to either **Enable** or Disable functions for OHCI or EHCI bus devices.

On Chip SATA Channel

This setting allows you to **Enable** or Disable the OnChip SATA channel.

On Chip SATA Type

Use this setting to set the On Chip SATA type. Options include Native IDE, RAID, AHCI and Legacy IDE.

RAID Codebase

This submenu appears when you choose "RAID" from the "On Chip SATA Type" setting above. This setting allows you to select the codebase for your RAID setup. Options are either Adaptec or **DotHill**.

SATA IDE Combined Mode

This setting allows you to **Enable** or Disable the SATA IDE combined mode.

PATA Channel Configuration

This allows you to set PATA channel configuration. Options include **SATA as Primary** or SATA as secondary.

Power Saving Features

Use this option to Enable or **Disable** power down saving features in the Southbridge chipset. This feature should be enabled for mobile systems and disabled for desktop systems. See the *AMD SB700 Power Saving* document for more details.

▶ RD890 Configuration

▶ PCI Express Configuration

▶ Port 02 ~ Port 13 Features

This submenu allows you to set the features for Ports 02 through 13 in the system. Each port submenu allows you to define the same settings below.

Gen 2 High Speed Mode

This setting allows you to set the Gen 2 high-speed mode. Options include **Auto**, Disabled, Software Initiated and Advertised RC.

Link ASPM

Use this setting to configure the Link ASPM. Options include **Disabled**, L0s, L1, L0s & L1, L0 Downstream and L0 Downstream + L1.

Note: For ATI GFx Card M2x use APSM L1 only, and for ATI GFx Card M5x use APSM L0 only.

Link Width

Use this setting to configure the Link Width. Options include **Auto**, x1, x2, x4, x8 and x16.

Compliance Mode

This setting allows you to Enable or **Disable** the Compliance Mode.

Remap Port Device Number

This setting allows you remap the Port Device number. Options include **Auto** and port numbers between 2 and 13.

L1 Immediate ACK

This setting allows you to Enable or **Disable** L1 ACK. When enabled, the L1 will be ACK'd immediately.

Lane Reversal

Use this setting to Enable or **Disable** Lane Reversal.

Hot Plug Support

Use this setting to set Hot Plug Support. Options include **Disabled** and Native.

▶ NB-SB Port Features

NB-SB Link APSM

Use this to set the NB-SB Link ABSM. Options include **L1** and Disabled.

Link Width

This setting allows you to set the Link Width for the NB-SB port. Options include **Auto**, x1, x2 and x4.

NP NB-SB VC1 Traffic Support

Use this setting to **Disable** or Enable NP NB-SB VC1 traffic support.

Compliance Mode

Use this setting to Enable or **Disable** Compliance Mode for the NB-SB port.

▶ GPP1 ~ GPP3b Core Settings

These submenus allow you to specify GPP core settings. Each submenu allows you to define the same settings listed below.

Core Configuration

This setting allows you to configure core configuration. Options include **Auto**, 1x16 and 2x8.

Powerdown Unused Lanes

This setting allows you to **Enable** or Disable the powerdown of unused lanes.

Turnoff Off PLL During L1/L23

This setting allows you to **Enable** or Disable turning off PLL during L1/L23.

TX Drive Strength

Use this setting to configure TX drive strength. Options include Auto, **26mA**, 20mA, 22mA and 24mA.

TXCLK Clock Gating in L1

Use this setting to **Enable** or Disable the TXCLK clock gating in L1.

LCLK Clock Gating in L1

Use this setting to **Enable** or Disable the LCLK clock gating in L1.

▶ SB Core Setting

TX Drive Strength

Use this setting to configure TX drive strength. Options include **Auto**, 26mA, 20mA, 22mA and 24mA.

TXCLK Clock Gating in L1

Use this setting to **Enable** or Disable the TXCLK clock gating in L1.

LCLK Clock Gating in L1

Use this setting to **Enable** or Disable the LCLK clock gating in L1.

GPP1 Deemphasis Setting

This option sets the GPP1 Deemphasis setting. Options include **-3.5 DB** and -6.0 DB.

GPP2 Deemphasis Setting

This option sets the GPP2 Deemphasis setting. Options include **-3.5 DB** and -6.0 DB.

▶ Hyper Transport Configuration

HT Extended Address

This setting allows you to Enable or Disable the HT extended address. Options include Enabled, **Disabled** and Auto.

HT3 Link Power State

This setting allows you to configure the HT3 Link power state. Options include **Auto**, LS0, LS1, LS2 and LS3.

Unit ID Clumping

Use this setting to configure Unit ID clumping. Options include **Disabled**, Auto, UnitID 2/3, UnitID B/C and UnitID 2/3 & B/C.

HT Link Tristate

This setting allwos you to configure the HT Link Tristate. Options include **Auto**, Disabled, CAD/CTL and CAD/CTL/CLK.

NB Deemphesis Level

Use this to set the NB deemphesis level. Options include Disabled, 0.4 dB, 1.32 dB, **-2.08dB**, 3.1 dB, 4.22 dB, 5.50 dB and 7.05 dB.

IOMMU

This setting is used to **Disable** or Enable IOMMU.

Primary Video Controller

Use this setting to specify the primary video controller boot order. Options include **PCIE-GPP1-GPP2-GPP3a-PCI**, PCIE-GPP2-GPP1-GPP3a-PCI, PCIE-GPP3a-GPP1-GPP2-PCI or PCI-PCIE-GPP1-GPP2-GPP3a.

▶ USB Configuration

This submenu displays the Module Version and lists the USB devices that are enabled as well as the following options.

Legacy USB Support

Select "Enabled" to enable the support for USB Legacy. Disable Legacy support if there are no USB devices installed in the system. "Auto" disabled Legacy support if no USB devices are connected. The options are Disabled, **Enabled** and Auto.

USB 2.0 Controller Mode

Use this setting to configure the USB 2.0 Controller in either **Hi-Speed** (480 Mps) or Full Speed (12 Mps) mode.

BIOS EHCI Hand Off

This is a workaround for OS's without EHCI hand-off support. The EHCI ownership change should be claimed by the EHCI driver. Options are **Enabled** or Disabled.

Legacy USB 1.1 HC Support

This option **Enables** or Disables support for legacy USB 1.1 HC.

▶ USB Mass Storage Device Configuration

USB Mass Storage Reset Delay

This option set the number of seconds that POST waits for the USB mass storage device after the Start Unit command. Options include 10 Sec, **20 Sec**, 30 Sec and 40 Sec.

Device # Emulation Type

This option sets the device emulation type. If **Auto**, USB devices less than 530MB will be emulated as Floppy and remaining as a hard drive. The Forced FDD option can be used to force a HDD formatted drive to boot as an FDD drive.

Active State Power Management

This option enables/disables the PCI Express L0s and L1 link power states. Options include Enabled or **Disabled**.

▶ IDE Configuration

Onboard PCI IDE Controller

This setting allows you to enable the Primary or Secondary PCI IDE controller. Options include Disabled, Primary, Secondary or **Both**.

▶ Primary/Secondary/Third/Fourth IDE Master/Slave

LBA/Large Mode

LBA (Logical Block Addressing) is a method of addressing data on a disk drive. The options are Disabled and **Auto**.

Block (Multi-Sector Transfer)

Block mode boosts IDE drive performance by increasing the amount of data transferred. Only 512 bytes of data can be transferred per interrupt if block mode is not used. Block mode allows transfers of up to 64 KB per interrupt. Select "Disabled" to allow the data to be transferred from and to the device one sector at a time. Select "Auto" to allows the data transfer from and to the device occur multiple sectors at a time if the device supports it. The options are **Auto** and Disabled.

PIO Mode

PIO (Programmable I/O) mode programs timing cycles between the IDE drive and the programmable IDE controller. As the PIO mode increases, the cycle time decreases. The options are **Auto**, 0, 1, 2, 3, and 4.

Select Auto to allow BIOS to auto detect the PIO mode. Use this value if the IDE disk drive support cannot be determined.

Select 0 to allow BIOS to use PIO mode 0, which has a data transfer rate of 3.3 MBs.

Select 1 to allow BIOS to use PIO mode 1, which has a data transfer rate of 5.2 MBs.

Select 2 to allow BIOS to use PIO mode 2, which has a data transfer rate of 8.3 MBs.

Select 3 to allow BIOS to use PIO mode 3, which has a data transfer rate of 11.1 MBs.

Select 4 to allow BIOS to use PIO mode 4, which has a data transfer rate of 16.6 MBs. This setting generally works with all hard disk drives manufactured after 1999. For other disk drives, such as IDE CD-ROM drives, check the specifications of the drive.

DMA Mode

Selects the DMA Mode. Options are **Auto**, SWDMA0, SWDMA1, SWDMA2, MWDMA0. MDWDMA1, MWDMA2, UDMA0. UDMA1, UDMA2, UDMA3, UDMA4 and UDMA5. (SWDMA=Single Word DMA, MWDMA=Multi Word DMA, UDMA=UltraDMA.)

S.M.A.R.T.

Self-Monitoring Analysis and Reporting Technology (SMART) can help predict impending drive failures. Select "Auto" to allow BIOS to auto detect hard

disk drive support. Select "Disabled" to prevent AMI BIOS from using the S.M.A.R.T. Select "Enabled" to allow AMI BIOS to use the S.M.A.R.T. to support hard drive disk. The options are Disabled, Enabled, and **Auto**.

32-Bit Data Transfer

Select "Enabled" to activate the function of 32-Bit data transfer. Select "Disabled" to deactivate the function. The options are **Enabled** and Disabled.

Hard Disk Write Protect

Use this setting to Enable or **Disable** hard disk write protection for your system. This is effective only if the device is accessed through the BIOS.

IDE Detect Timeout (Sec)

Use the +/- keys to adjust and select the time out for detecting ATA/ATAPI devices. The default value is **35**.

ATA(PI) 80Pin Cable Detection

This option selects the mechanism used for detecting the installation of an 80-pin ATA(PI) cable. Options include **Host & Device**, Host or Device.

▶ PCI/PnP Configuration

Clear NVRAM

Select Yes to clear NVRAM during boot-up. The options are Yes and **No**.

Plug & Play O/S

Select Yes to allow the OS to configure Plug & Play devices. (This is not required for system boot if your system has an OS that supports Plug & Play.) Select **No** to allow AMIBIOS to configure all devices in the system.

PCI Latency Timer

This option sets the latency of all PCI devices on the PCI bus. Select a value to set the PCI latency in PCI clock cycles. Options are 32, **64**, 96, 128, 160, 192, 224 and 248.

Allocate IRQ to PCI VGA

Use this option to allocate IRQ to the PCI VGA card. Opiton include **Yes** and No. Selecting **Yes** assigns IRQ to PCI VGA card if the card requests IRQ. Selecting No means the system will not assign IRQ to the PCI VGA card even if the card requests IRQ.

Pallette Snooping

This option Enables or **Disables** Pallette Snooping. If enabled, the system informs the PCI devices that an ISA graphics device is installed in the sytem so the card will function normally.

PCI IDE Busmaster

Use this setting to **Enable** or Disable BIOS enabled uses of PCI Busmastering for reading or writing to IDE drives.

Offboard PCI/ISA IDE Card

Some PCI IDE cards may require this option to be set to the PCI slot number that is holding the card. The Auto setting works for most PCI IDE cards. Options include **Auto**, PCI Slot 1, PCI Slot , PCI Slot 3, PCI Slot 4, PCI Slot 5 and PCI Slot 6.

Load Onboard LAN Option ROM

This option **Enables** or Disables the onboard LAN option ROM.

IRQ3 ~ IRQ15 Settings

These settings specify if IRQ is available to be used by PCI/PnP devices or is reserved for use by legacy ISA devices. Options are **Available** or Reserved.

DMA Channel 0 ~ DMA Channel 7 Settings

These settings specify if a DMA Channel is available to be used by PCI/PnP devices or is reserved for use by legacy ISA devices. Options are **Available** or Reserved.

Reserved Memory Size

This option specifies the size of the memory block reserved for legacy ISA devices. Options include **Disabled**, 16k, 32k or 64k.

HotPlug Reserve I/O Port Size

This option sets the size that the I/O port block reserves for HotPlug or CardBus devices. Options include **Auto**, 4k, 8k, 12k, 16k, 20k, 24k and 28k.

HotPlug Reserve Memory Size

This option sets the size of the memory block that is reserved for HotPlug or CardBus devices. Options include **Auto**, 8M, 16M, 32M, 64M, 128MB, 256MB and 512MB.

Hotplug Reserve PFMemory Size

This option sets the size of the memory block that is reserved for HotPlug or CardBus devices. Options include **Auto**, 32M, 64M, 128MB, 256MB, 512MB, 1024M and 2048M.

▶ SuperI/O Configuration

Serial 1 Address

This option specifies the base I/O port address and Interrupt Request address of serial port 1. Select "Disabled" to prevent the serial port from accessing any system resources. When this option is set to *Disabled*, the serial port physically becomes unavailable. Select "3F8/IRQ4" to allow the serial port to use 3F8 as its I/O port address and IRQ 4 for the interrupt address. Options include Disabled, **3F8/IRQ4**, 3E8/IRQ4 and 2E8/IRQ3

Serial 2 Address

This option specifies the base I/O port address and Interrupt Request address of serial port 2. Select "Disabled" to prevent the serial port from accessing any system resources. When this option is set to "Disabled", the serial port physically becomes unavailable. Select "2F8/IRQ3" to allow the serial port to use 2F8 as its I/O port address and IRQ 3 for the interrupt address. Options include Disabled, **2F8/IRQ3**, 3E8/IRQ4 and 2F8/IRQ3.

▶ Remote Access Configuration

Remote Access

Use this option to **Enable** or Disable Remote Access in your system. If enabled, the settings below will appear.

Serial Port Number

Use this setting to select the serial port for console redirection. Options include COM1 or **COM2**. The displayed base address and IRQ for the serial port changes to reflect the selection you make.

Note: Make sure the selected port is enabled.

Serial Port Mode

Selects the serial port settings to use. Options are **(115200 8, n, 1)**, (57600 8, n, 1), (38400 8, n, 1), (19200 8, n, 1) and (09600 8, n, 1).

Flow Control

Selects the flow control to be used for console redirection. Options are **None,** Hardware and Software.

Redirection After BIOS POST

This option sets redirction after BIOS POST. Options are Disable (no redirection after BIOS POST), Boot Loader (redirection during POST and during boot loader) and **Always** (redirection always active). Note that some OS's may not work with this set to Always.

Terminal Type

Selects the type of the target terminal. Options are **ANSI**, VT100 and VT-UTF8.

VT-UTF8 Combo Key Support

Allows you to **Enable** or Disable VT-UTF8 combination key support for ANSI/ VT100 terminals.

Sredir Memory Display Delay

Use this setting to set the delay in seconds to display memory information. Options are **No Delay**, 1 sec, 2 secs and 4 secs.

▶ Hardware Health Configuration

CPU Overheat Alarm

This setting allows you to specify the type of alarm for CPU overheating. Options include The Early Alarm and **The Default Alarm**.

Fan Speed Control

This feature allows the user to determine how the system will control the speed of the onboard fans. The options are Full Speed/FS (Max Cooling), Performance/ PF (Better Cooling), **Balanced/BL** (Balance between performance and energy saving), Energy Saving/ES (Lower Power and Noise).

Other items in the submenu are systems monitor displays for the following information:

CPU 1 Temperature, CPU 2 Temperature, System Temperature, Air Temperature, Fan 1-8 Reading, CPU 1 VCore, CPU 2 VCore, CPU 1 DDR3 Memory, CPU 2 DDR3 Memory, CPU 1 Memory Vref 0.75V, CPU 2 Memory Vref 0.75V, SR5690 Core Power P1V1, 1.8V, 5V, 12V, 3.3V, 3.3V STB, Battery 3.0V and CPU 1 1.2V.

CPU Temperature Display (CTD)

CPU Temperature descriptions are defined as:

Low → [Tctl Value = Lowest Value, Tctl Value = -45]

Medium → [Tctl Value = -46, Tctl Value = 60]

High → [Tctl Value = -61 and Above]

Note: Only CPU temperature (Low, Medium, High) and system temperature (RT1) are required to be displayed in BIOS and in-system monitoring software. Other Motherboard components such as memory, chipset, SAS and 10Gb controllers, and others are not requried to display temperatures. For debugging and testing purposes, BIOS and system monitoring software can show motherboard components' temperatures (such as memory, chipset, SAS and 10Gb controllers). However for SMCI standard release version BIOS and system monitoring software, motherboard components' temperatures are NOT required to be displayed.

CPU Overheating Alarm (COA)

CPU Overheating Alarm (COA) has "Early Alarm" and "Default Alarm" (default) options in the BIOS, and is required to be implemented in all fan speed control modes.

The Early Alarm is enabled when the Tctl value = 65, and is disabled when the Tctl value drops from 65 to 62.

The Default Alarm (default setting) is enabled when the Tctl value = 70, and is disabled when the Tctl value drops from 70 to 67.

When COA (either Early or Default Alarm) is *enabled*, the following actions are required to be executed:

- System overheating LED is required to be ON and to solid red.
- Onboard buzzer or speaker is required to be ON and to be a continuous sound.
- All system fans are required to be operated at full speed.
- System monitoring software (such as Super Doctor and IPMI if available) is required to report and record CPU overheating events in the event logs.

When COA (either Early or Default Alarm) is *disabled,* the following actions are required to be executed:

- System overheating LED is required to be OFF.
- Onboard buzzer or speaker is required to be OFF.
- All system fans are required to be returned to a normal, non-CPU-overheating LFSC condition.

Condition	When a CPU is overheating
Front Panel Overheating LED	On and Solid Red
Onboard Buzzer or Speaker	On and Continuous Sound
System Fan Speed Controls	Full Speed
BMC	Report PROCHOT
BMC Event Log	Record PROCHOT
Super Doctor	Report PROCHOT
Super Doctor Event Log	Record PROCHOT

▶ ACPI Configuration

▶ Advanced ACPI Configuration

ACPI Version Features

Use this setting the determine which ACPI version to use. Options are ACPI v1.0, **ACPI v2.0** and ACPI v3.0.

ACPI APIC Support

Determines whether to include the ACPI APIC table pointer in the RSDT pointer list. The available options are **Enabled** and Disabled.

AMI OEMB Table

This setting specifies whether to include the OEMB table pointer to the R(X) SOT pointer lists. Options include **Enabled** or Disabled.

Headless Mode

Use this setting to Enable or **Disable** headless operation mode through ACPI.

▶ IPMI Configuration

This menu shows static information about the IPMI firmware revision and status of the BMC, as well as options for IPMI configuration.

▶ View BMC System Event Log

Pressing the Enter key will open the following settings. Use the "+" and "-" keys to navigate through the system event log.

Clear BMC System Event Log

Selecting this and pressing the Enter key will clear the BMC system event log.

▶ Set LAN Configuration

Use the "+" and "-" keys to choose the desired channel number. This displays Channel Number and Channel Number Status information.

▶ IP Address

This submenu sets the IP address source as either Static or **DHCP**. Selecting Static allows you to manually set the IP Address, Subnet Mask and Gateway Address.

In the field provided here enter the IP address in the decimal form of xxx.xxx.xxx.xxx with xxx having a value of less than 256 and in decimal form only The IP address and current IP address in the BMC are shown.

▶ MAC Address

In the field provided here enter the MAC address in the hex form of xx.xx.xx.xx.xx.xx with xx in hex form only. The current MAC address in the BMC is shown.

▶ Subnet Mask

In the field provided here enter the Subnet address in the decimal form of xxx.xxx.xxx.xxx with xxx having a value of less than 256 and in decimal form only. The current subnet address in the BMC is shown.

▶ Gateway Address

In the field provided here enter the Gateway address in the decimal form of xxx.xxx.xxx.xxx with xxx having a value of less than 256 and in decimal form only. The current Gateway address in the BMC is shown.

▶ Event Log Configuration

View Event Log

Pressing the Enter key will open the event log. Use the "↑" and "↓" keys to navigate through the system event log.

Mark all Events as Read

Selecting this and pressing the Enter key marks all events as read in the event log.

Clear Event Log

Selecting this and pressing the Enter key clears the system event log.

7-4 Security Menu

AMI BIOS provides a Supervisor and a User password. If you use both passwords, the Supervisor password must be set first.

Change Supervisor Password

Select this option and press <Enter> to access the sub menu, and then type in the password.

Change User Password

Select this option and press <Enter> to access the sub menu, and then type in the password.

Boot Sector Virus Protection

This option is near the bottom of the Security Setup screen. Select "Disabled" to deactivate the Boot Sector Virus Protection. Select "Enabled" to enable boot sector protection. When "Enabled", AMI BIOS displays a warning when any program (or virus) issues a Disk Format command or attempts to write to the boot sector of the hard disk drive. The options are Enabled and **Disabled**.

7-5 Boot Settings Menu

▶ Boot Device Priority

This feature allows you to prioritize the boot sequence from the list of available devices. A device that is in parenthesis has been disabled in the corresponding type menu.

▶ Hard Disk Drives

This feature allows you to specify the boot sequence from the list of available hard disk drives. A device that is in parenthesis has been disabled in the corresponding type menu.

▶ Removable Drives

This feature allows you to specify the boot sequence from the list of available removable drives. A device that is in parenthesis has been disabled in the corresponding type menu.

▶ CD/DVD Drives

This feature allows you to specify the boot sequence from the list of available CD/DVD drives. A device that is in parenthesis has been disabled in the corresponding type menu.

▶ Network Drives

This feature allows you to specify the boot sequence from the list of available network drives. A device that is in parenthesis has been disabled in the corresponding type menu.

7-6 Exit Menu

Select the Exit tab from AMI BIOS Setup Utility screen to enter the Exit BIOS Setup screen.

Save Changes and Exit

When you have completed the system configuration changes, select this option to leave BIOS Setup and reboot the computer, so the new system configuration parameters can take effect. Select Save Changes and Exit from the Exit menu and press <Enter>.

Discard Changes and Exit

Select this option to quit BIOS Setup without making any permanent changes to the system configuration and reboot the computer. Select Discard Changes and Exit from the Exit menu and press <Enter>.

Discard Changes

Select this option and press <Enter> to discard all the changes and return to AMI BIOS Utility Program.

Load Optimal Defaults

To set this feature, select Load Optimal Defaults from the Exit menu and press <Enter>. Then Select "OK" to allow BIOS to automatically load the Optimal Defaults as the BIOS Settings. The Optimal settings are designed for maximum system performance, but may not work best for all computer applications.

Load Fail-Safe Defaults

To set this feature, select Load Fail-Safe Defaults from the Exit menu and press <Enter>. The Fail-Safe settings are designed for maximum system stability, but not maximum performance.

Appendix A

BIOS Error Beep Codes

During the POST (Power-On Self-Test) routines, which are performed each time the system is powered on, errors may occur.

Non-fatal errors are those which, in most cases, allow the system to continue the boot-up process. The error messages normally appear on the screen.

Fatal errors are those which will not allow the system to continue the boot-up procedure. If a fatal error occurs, you should consult with your system manufacturer for possible repairs.

These fatal errors are usually communicated through a series of audible beeps. The numbers on the fatal error list (on the following page) correspond to the number of beeps for the corresponding error. All errors listed, with the exception of Beep Code 8, are fatal errors.

Beep Code	Error Message	Description
1 beep	Refresh	Circuits have been reset (Ready to power up)
5 short, 1 long	Memory error	No memory detected in system
1 long, 8 short	Video error	Video adapter disabled or missing

Notes

Appendix B

Installing Windows

After all hardware components have been installed, you must first configure RAID Settings before you install the Windows OS and other software drivers. To configure RAID settings, please refer to RAID Configuration User Guides posted on our web site at www.supermicro.com/support/manuals.

Note: The following OS installation instructions are written for the Windows XP/2003 OS only. If you have the Windows 2008 or Windows Vista OS, please follow the instructions displayed on your screen to install the OS.

B-1 Installing Windows to a RAID System

1. Insert Microsoft's Windows XP/Windows 2003 Setup CD in the CD-ROM drive and the system will start booting up from CD.

2. Press the <F6> key when the message "Press F6 if you need to install a third party SCSI or RAID driver" displays.

3. When the Windows XP/Windows 2003 Setup screen appears, press "S" to specify additional device(s).

4. Insert the driver diskette you created in Section 5-11, *Building a Driver Diskette*, into Drive A: and press the <Enter> key.

5. Highlight "Manufuacturer Supplied Hardware Support Disk" and hit the <Enter> key.

6. Highlight the first "Adaptec RAID" driver shown and press the <Enter> key to install it. Soon a similar blue screen will appear again.

7. Again hit the <S> key, then highlight the second item, "nForce Storage Controller" and press the <Enter> key, then <Enter> again to continue with the Windows setup.

8. Press the <Enter> key to continue the installation process. (If you need to specify any additional devices to be installed, do it at this time.) Once all devices are specified, press the <Enter> key to continue with the installation.

9. From the Windows XP/Windows 2003 Setup screen, press the <Enter> key. The XP/2003 Setup will automatically load all device files and then, continue the Windows XP/Windows 2003 installation.

10. After the Windows XP/Windows 2003 OS Installation has completed, the system will automatically reboot.

B-2 Installing Windows to a Non-RAID System

1. Insert Microsoft's Windows OS Setup CD in the CD-ROM drive and the system will start booting up from the CD.

2. Continue with the installation. The Windows OS Setup screen will display.

3. From the Windows OS Setup screen, press the <Enter> key. The OS Setup will automatically load all device files and then continue with the Windows installation.

4. After the installation has completed, the system will automatically reboot.

5. Insert the Supermicro Setup CD that came with your system into the CD-ROM drive during system boot and the main screen will display.

Appendix C

System Specifications

Processors

Dual AMD Opteron 6000 series (AMD Socket G34 type) processors

Note: please refer to our website for details on supported processors.

Chipset

Dual AMD SR5690 chipsets and one SP5100 Southbridge chipset

BIOS

16 Mb AMIBIOS SPI Flash ROM

Memory Capacity

Sixteen single/dual/tri/quad channel DIMM slots supporting up to
128 GB of ECC/Non-ECC UDIMM or up to 512 GB of ECC RDIMM SDRAM

Note: interleaved memory requires DIMMs to be installed in pairs - refer to Section 5-6 for details.

Serial ATA Controller

AMD SP5100 on-chip controller to support six 3 Gb/s Serial ATA (RAID 0 and 1 are supported)

SATA Drive Bays

Six hot-swap drive bays to house 2.5" SATA drives

PCI Expansion

One low-profile PCI Express x16 slot (with pre-installed riser cards)

Two full size expansion cards OR two double width GPU cards

Serverboard

H8DGG-QF

Dimensions (propriatory format): 7.74" x 16.64" (197 x 423 mm)

Chassis

SC118GTS-1400BP (1U rackmount)
Dimensions: (WxHxD) 17.2 x 1.7 x 28.2 in. (437 x 43 x 716 mm)

Weight

Gross (Bare Bone): 38 lbs. (17.2 kg)

System Cooling

Four sets of 4-cm counter-rotating cooling fans (fan speed controlled by BIOS setting)

System Input Requirements

AC Input Voltage: 180-240 VAC
Rated Input Current: 7.2A (180V) to 9.5 (240V)
Rated Input Frequency: 50-60 Hz

Power Supply

Rated Output Power: 1400 W w/PFC (Part# PWS-1K41F-1R)
Rated Output Voltages: +12V (117A), +5Vsb (6A)

Operating Environment

Operating Temperature: 10º to 35º C (50º to 95º F)
Non-operating Temperature: -40º to 70º C (-40º to 158º F)
Operating Relative Humidity: 20% to 95% (non-condensing)
Non-operating Relative Humidity: 5 to 95% (non-condensing)

Regulatory Compliance

Electromagnetic Emissions: FCC Class A, EN 55022 Class A, EN 61000-3-2/-3-3, CISPR 22 Class A

Electromagnetic Immunity: EN 55024/CISPR 24, (EN 61000-4-2, EN 61000-4-3, EN 61000-4-4, EN 61000-4-5, EN 61000-4-6, EN 61000-4-8, EN 61000-4-11)

Safety: CSA/EN/IEC/UL 60950-1 Compliant, UL or CSA Listed (USA and Canada), CE Marking (Europe)

California Best Management Practices Regulations for Perchlorate Materials:

This Perchlorate warning applies only to products containing CR (Manganese Dioxide) Lithium coin cells. “Perchlorate Material-special handling may apply. See www.dtsc.ca.gov/hazardouswaste/perchlorate”

Notes

(continued from front)

The products sold by Supermicro are not intended for and will not be used in life support systems, medical equipment, nuclear facilities or systems, aircraft, aircraft devices, aircraft/emergency communication devices or other critical systems whose failure to perform be reasonably expected to result in significant injury or loss of life or catastrophic property damage. Accordingly, Supermicro disclaims any and all liability, and should buyer use or sell such products for use in such ultra-hazardous applications, it does so entirely at its own risk. Furthermore, buyer agrees to fully indemnify, defend and hold Supermicro harmless for and against any and all claims, demands, actions, litigation, and proceedings of any kind arising out of or related to such ultra-hazardous use or sale.